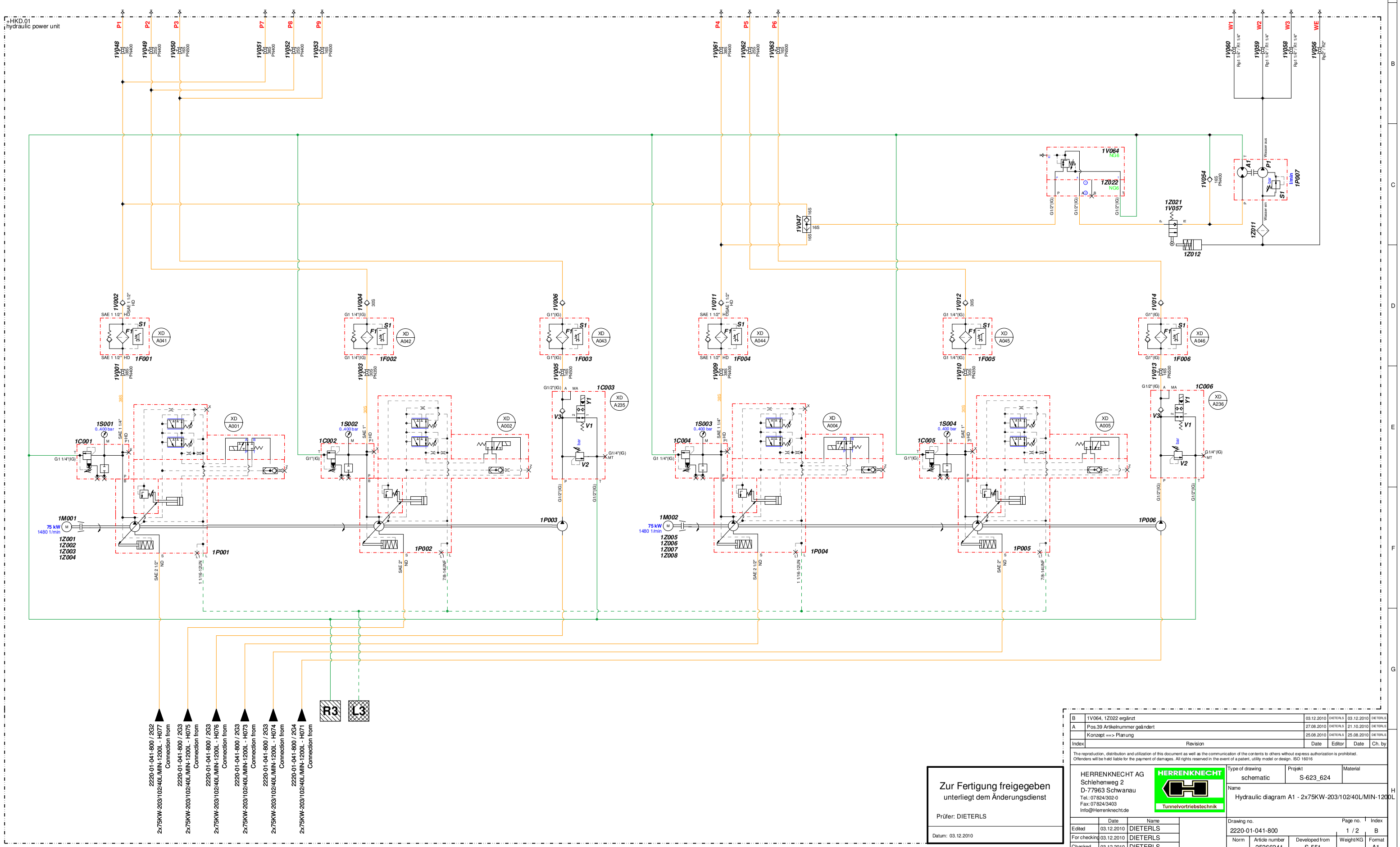

Zur Fertigung freigegeben
unterliegt dem Änderungsdienst

Prüfer: DIETERLS

Datum: 03.12.2010

Index	Revision	Date	Editor	Date	Ch. by
B	1V064, 1Z022 ergänzt	03.12.2010	DIETERLS	03.12.2010	DIETERLS
A	Pos.39 Artikelnummer geändert	27.08.2010	DIETERLS	21.10.2010	DIETERLS
	Konzept ==> Planung	25.08.2010	DIETERLS	25.08.2010	DIETERLS

The reproduction, distribution and utilization of this document as well as the communication of the contents to others without express authorization is prohibited.
Offenders will be held liable for the payment of damages. All rights reserved in the event of a patent, utility model or design. ISO 16016

HERRENKNECHT AG
Schlehenweg 2
D-77963 Schwanau
Tel.: 07824/302-0
Fax: 07824/3403
Info@Herrenknecht.de

HERRENKNECHT
Tunnelvortriebstechnik

	Date	Name
Edited	03.12.2010	DIETERLS
For checking	03.12.2010	DIETERLS
Checked	03.12.2010	DIETERLS

Type of drawing: schematic
Projekt: S-623_624
Material:

Name: Hydraulic diagram A1 - 2x75KW-203/102/40L/MIN-1200L

Drawing no.	Page no.	Index
2220-01-041-800	1 / 2	B

Norm	Article number	Developed from	Weight/KG	Format
	25266241	S-551		A1

+HKD.01
hydraulic power unit

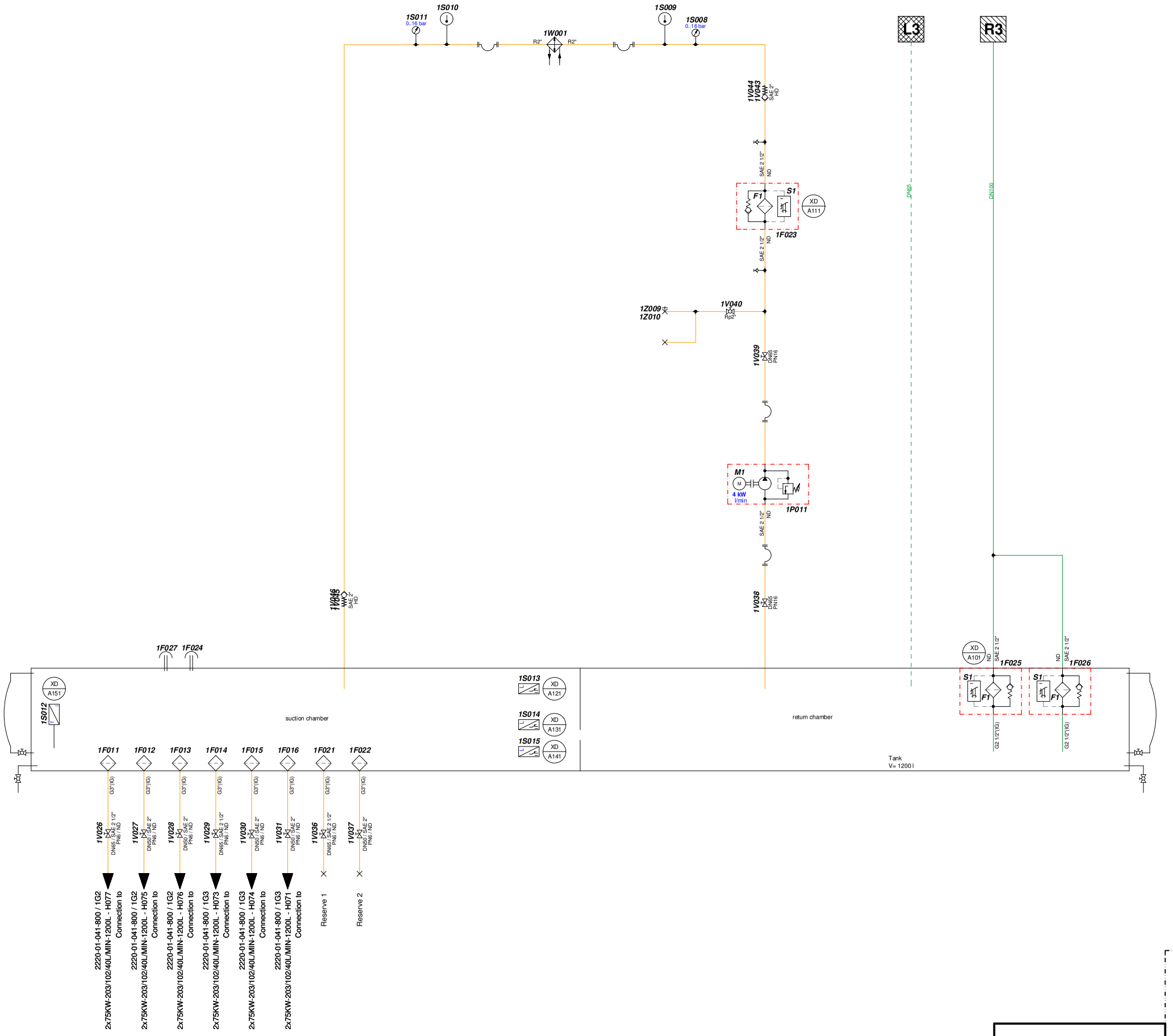

Index	Revision	Date	Editor	Date	Ch. by
B	1V064, 1Z022 ergänzt	03.12.2010	DIETERLS	03.12.2010	DIETERLS
A	Pos.39 Artikelnummer geändert	27.08.2010	DIETERLS	21.10.2010	DIETERLS
	Konzept ==> Planung	25.08.2010	DIETERLS	25.08.2010	DIETERLS

The reproduction, distribution and utilization of this document as well as the communication of the contents to others without express authorization is prohibited.
Offenders will be held liable for the payment of damages. All rights reserved in the event of a patent, utility model or design. ISO 16016

Zur Fertigung freigegeben
unterliegt dem Änderungsdienst

Prüfer: DIETERLS

Datum: 03.12.2010

HERRENKNECHT AG
Schlehenweg 2
D-77963 Schwanau
Tel.: 07824/302-0
Fax: 07824/3403
Info@Herrenknecht.de

HERRENKNECHT
Tunnelvortriebstechnik

	Date	Name
Edited	03.12.2010	DIETERLS
For checking	03.12.2010	DIETERLS
Checked	03.12.2010	DIETERLS

Type of drawing	Projekt	Material
schematic	S-623_624	

Name
Hydraulic diagram A1 - 2x75KW-203/102/40L/MIN-1200L

Drawing no.	Page no.	Index
2220-01-041-800	2 / 2	B

Norm	Article number	Developed from	Weight/KG	Format
	25266241	S-551		A1

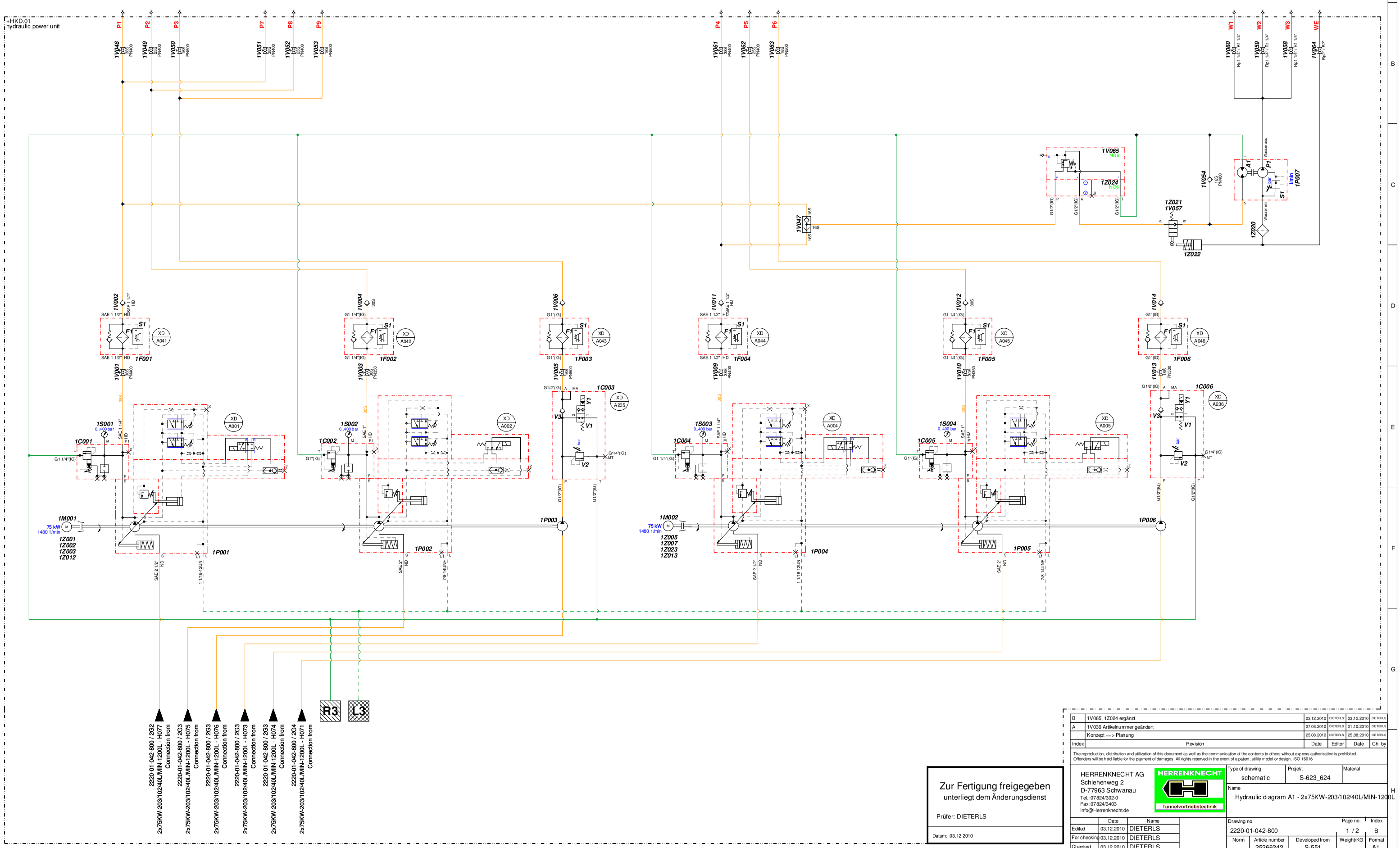

Zur Fertigung freigegeben
unterliegt dem Änderungsdienst

Prüfer: DIETERLS

Datum: 03.12.2010

Index	Revision	Date	Editor	Date	Ch. by
B	1V065, 1Z024 ergänzt	03.12.2010	DIETERLS	03.12.2010	DIETERLS
A	1V039 Artikelnummer geändert	27.08.2010	DIETERLS	21.10.2010	DIETERLS
	Konzept ==> Planung	25.08.2010	DIETERLS	25.08.2010	DIETERLS

The reproduction, distribution and utilization of this document as well as the communication of the contents to others without express authorization is prohibited.
Offenders will be held liable for the payment of damages. All rights reserved in the event of a patent, utility model or design. ISO 16016

HERRENKNECHT AG
Schlehenweg 2
D-77963 Schwanau
Tel.: 07824/302-0
Fax: 07824/3403
Info@Herrenknecht.de

HERRENKNECHT
Tunnelvortriebstechnik

	Date	Name
Edited	03.12.2010	DIETERLS
For checking	03.12.2010	DIETERLS
Checked	03.12.2010	DIETERLS

Type of drawing: schematic
Projekt: S-623_624
Material:

Name: Hydraulic diagram A1 - 2x75KW-203/102/40L/MIN-1200L

Drawing no.	Page no.	Index
2220-01-042-800	1 / 2	B

Norm	Article number	Developed from	Weight/KG	Format
	25266242	S-551		A1

+HKD.01
hydraulic power unit

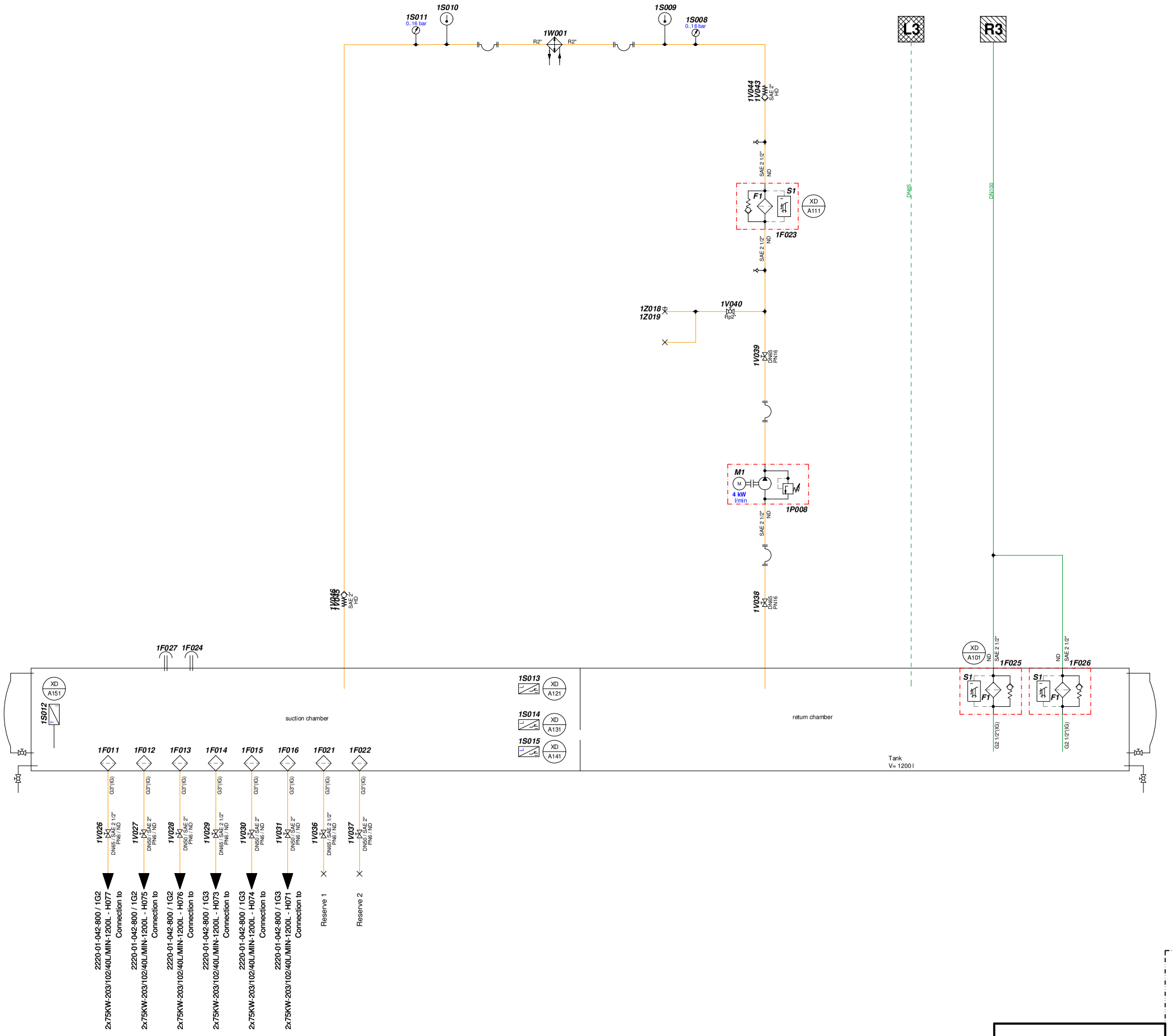

Index	Revision	Date	Editor	Date	Ch. by
B	1V065, 1Z024 ergänzt	03.12.2010	DIETERLS	03.12.2010	DIETERLS
A	1V039 Artikelnummer geändert	27.08.2010	DIETERLS	21.10.2010	DIETERLS
	Konzept ==> Planung	25.08.2010	DIETERLS	25.08.2010	DIETERLS

The reproduction, distribution and utilization of this document as well as the communication of the contents to others without express authorization is prohibited.
Offenders will be held liable for the payment of damages. All rights reserved in the event of a patent, utility model or design. ISO 16016

Zur Fertigung freigegeben
unterliegt dem Änderungsdienst

Prüfer: DIETERLS

Datum: 03.12.2010

HERRENKNECHT AG
Schlehenweg 2
D-77963 Schwanau
Tel.: 07824/302-0
Fax: 07824/3403
Info@Herrenknecht.de

HERRENKNECHT
Tunnelvortriebstechnik

Type of drawing	Projekt	Material
schematic	S-623_624	

Name
Hydraulic diagram A1 - 2x75KW-203/102/40L/MIN-1200L

	Date	Name
Edited	03.12.2010	DIETERLS
For checking	03.12.2010	DIETERLS
Checked	03.12.2010	DIETERLS

Drawing no.	Page no.	Index
2220-01-042-800	2 / 2	B

Norm	Article number	Developed from	Weight/KG	Format
	25266242	S-551		A1

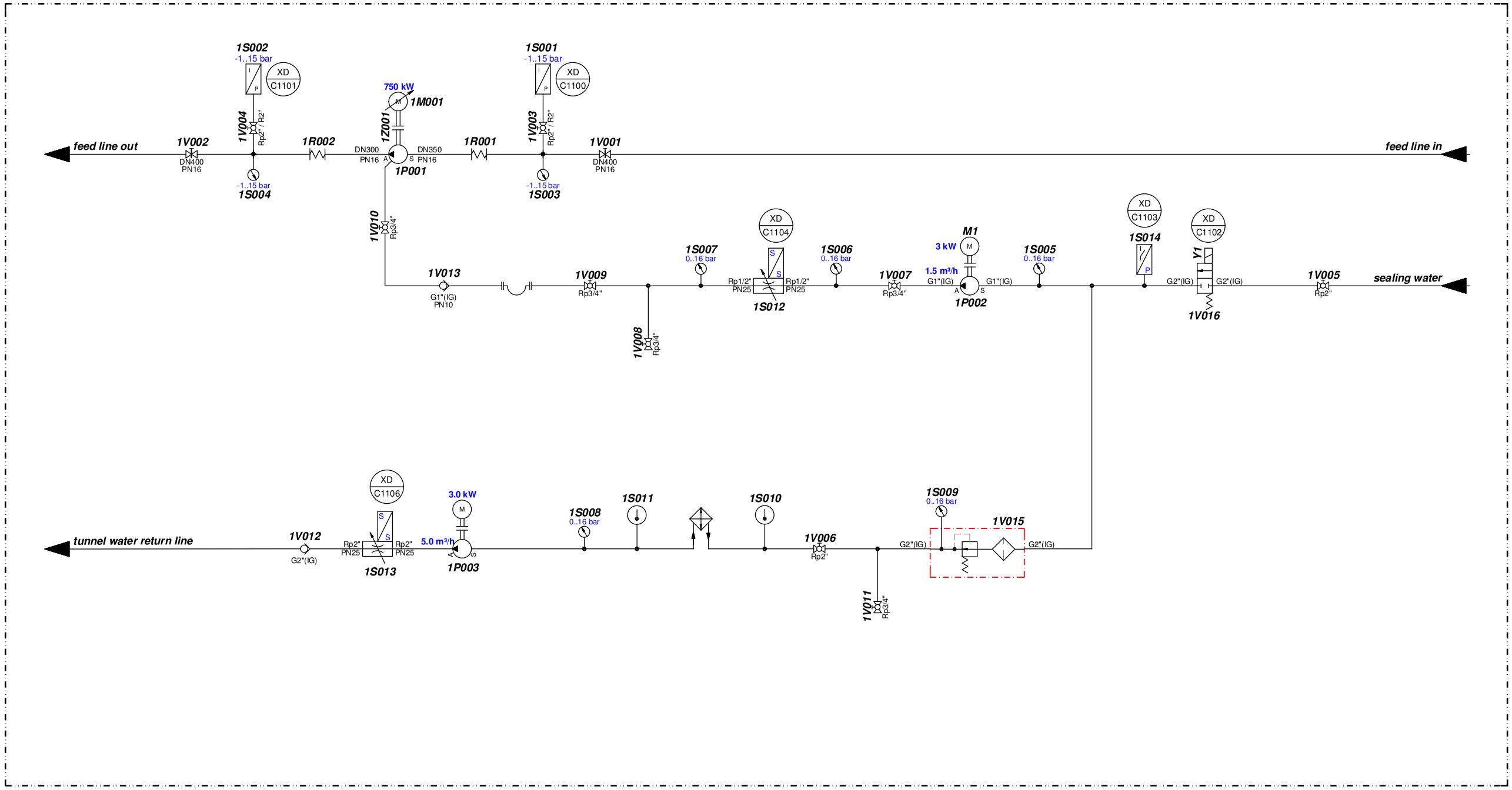

Zur Fertigung freigegeben
unterliegt dem Änderungsdienst

Prüfer: DIETERLS

Datum: 01.07.2010

Index	Revision	Date	Editor	Date	Ch. by
B	1P003 Artikelnummer geändert	01.07.2010	DIETERLS	01.07.2010	DIETERLS
A	1V001, 1V002 Artikelnummer geändert	29.06.2010	DIETERLS	30.06.2010	DIETERLS
	Konzept ==> Planung	22.06.2010	DIETERLS	22.06.2010	DIETERLS

The reproduction, distribution and utilization of this document as well as the communication of the contents to others without express authorization is prohibited.
Offenders will be held liable for the payment of damages. All rights reserved in the event of a patent, utility model or design. ISO 16016

HERRENKNECHT AG
Schlehenweg 2
D-77963 Schwanau
Tel.: 07824/302-0
Fax: 07824/3403
Info@Herrenknecht.de

HERRENKNECHT
Tunnelvortriebstechnik

	Date	Name
Edited	01.07.2010	DIETERLS
For checking	01.07.2010	DIETERLS
Checked	01.07.2010	DIETERLS

Type of drawing: schematic
Projekt: S-623_624
Material:
Name: Water diagram A2 - S-623_P1.1

Drawing no.	Page no.	Index
2220-03-070-800	1 / 1	B

Norm	Article number	Developed from	Weight/KG	Format
	25265667	S-551		A2

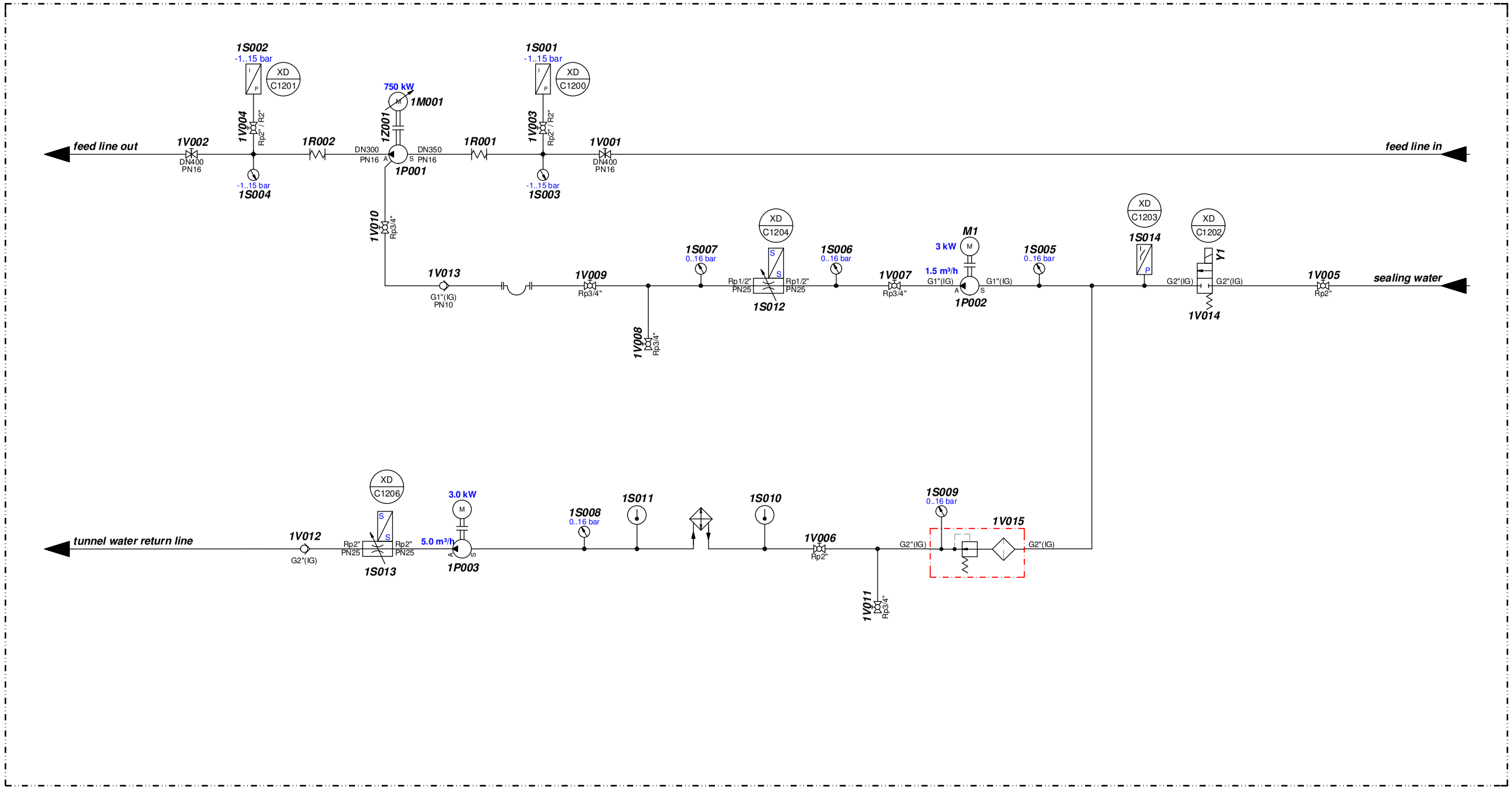

Zur Fertigung freigegeben
unterliegt dem Änderungsdienst

Prüfer: DIETERLS

Datum: 01.07.2010

Index	Revision	Date	Editor	Date	Ch. by
B	1P003 Artikelnummer geändert	01.07.2010	DIETERLS	01.07.2010	DIETERLS
A	1V001, 1V002 Artikelnummer geändert	29.06.2010	DIETERLS	30.06.2010	DIETERLS
	Konzept ==> Planung	22.06.2010	DIETERLS	22.06.2010	DIETERLS

The reproduction, distribution and utilization of this document as well as the communication of the contents to others without express authorization is prohibited.
Offenders will be held liable for the payment of damages. All rights reserved in the event of a patent, utility model or design. ISO 16016

HERRENKNECHT AG
Schlehenweg 2
D-77963 Schwanau
Tel.: 07824/302-0
Fax: 07824/3403
Info@Herrenknecht.de

HERRENKNECHT
Tunnelvortriebstechnik

	Date	Name
Edited	01.07.2010	DIETERLS
For checking	01.07.2010	DIETERLS
Checked	01.07.2010	DIETERLS

Type of drawing	Projekt	Material
schematic	S-623_624	

Name: Water diagram A2 - S-623_P1.2

Drawing no.	Page no.	Index
2220-03-071-800	1 / 1	B

Norm	Article number	Developed from	Weight/KG	Format
	25265668	S-551		A2

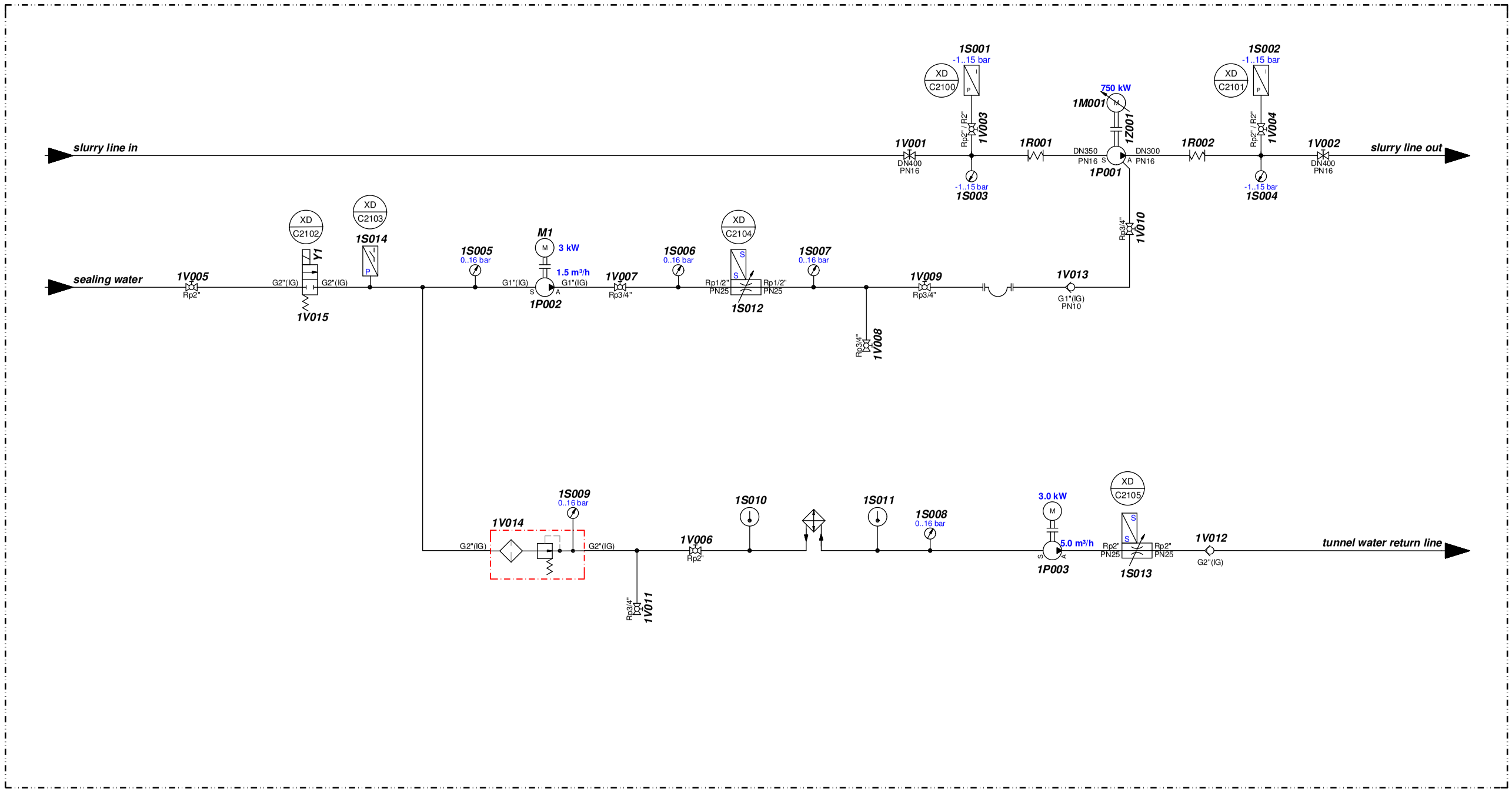

Zur Fertigung freigegeben
unterliegt dem Änderungsdienst

Prüfer: DIETERLS

Datum: 01.07.2010

Index	Revision	Date	Editor	Date	Ch. by
A	1P003 Artikelnummer geändert	29.06.2010	DIETERLS	01.07.2010	DIETERLS
	Konzept ==> Planung	22.06.2010	DIETERLS	22.06.2010	DIETERLS

The reproduction, distribution and utilization of this document as well as the communication of the contents to others without express authorization is prohibited.
Offenders will be held liable for the payment of damages. All rights reserved in the event of a patent, utility model or design. ISO 16016

HERRENKNECHT AG
Schlehenweg 2
D-77963 Schwanau
Tel.: 07824/302-0
Fax: 07824/3403
Info@Herrenknecht.de

HERRENKNECHT
Tunnelvortriebstechnik

	Date	Name
Edited	29.06.2010	DIETERLS
For checking	01.07.2010	DIETERLS
Checked	01.07.2010	DIETERLS

Type of drawing: schematic
Projekt: S-623_624
Material:
Name: Water diagram A2 - S-623_P2.2

Drawing no.	Page no.	Index
2220-03-072-800	1 / 1	A

Norm	Article number	Developed from	Weight/KG	Format
	25265669	S-551		A2

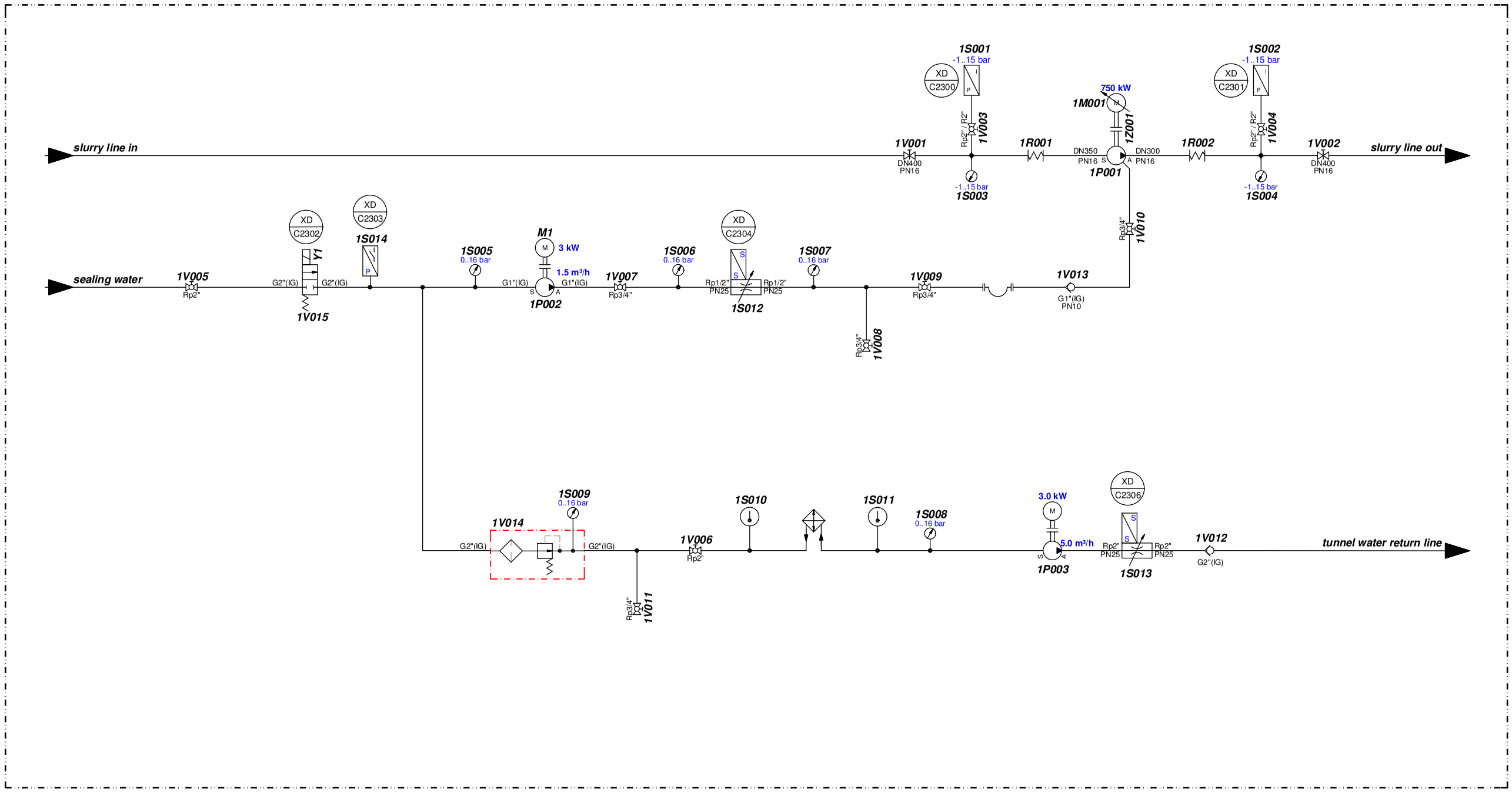

Zur Fertigung freigegeben
unterliegt dem Änderungsdienst

Prüfer: DIETERLS

Datum: 01.07.2010

Index	Revision	Date	Editor	Date	Ch. by
A	1P003 Artikelnummer geändert	01.07.2010	DIETERLS	01.07.2010	DIETERLS
	Konzept ==> Planung	22.06.2010	DIETERLS	22.06.2010	DIETERLS

The reproduction, distribution and utilization of this document as well as the communication of the contents to others without express authorization is prohibited.
Offenders will be held liable for the payment of damages. All rights reserved in the event of a patent, utility model or design. ISO 16016

HERRENKNECHT AG
Schlehenweg 2
D-77963 Schwanau
Tel.: 07824/302-0
Fax: 07824/3403
Info@Herrenknecht.de

HERRENKNECHT
Tunnelvortriebstechnik

	Date	Name
Edited	01.07.2010	DIETERLS
For checking	01.07.2010	DIETERLS
Checked	01.07.2010	DIETERLS

Type of drawing: schematic
Projekt: S-623_624
Material:
Name: Water diagram A2 - S-623_P2.3

Drawing no.	Page no.	Index
2220-03-073-800	1 / 1	A

Norm	Article number	Developed from	Weight/KG	Format
	25265670	S-551		A2

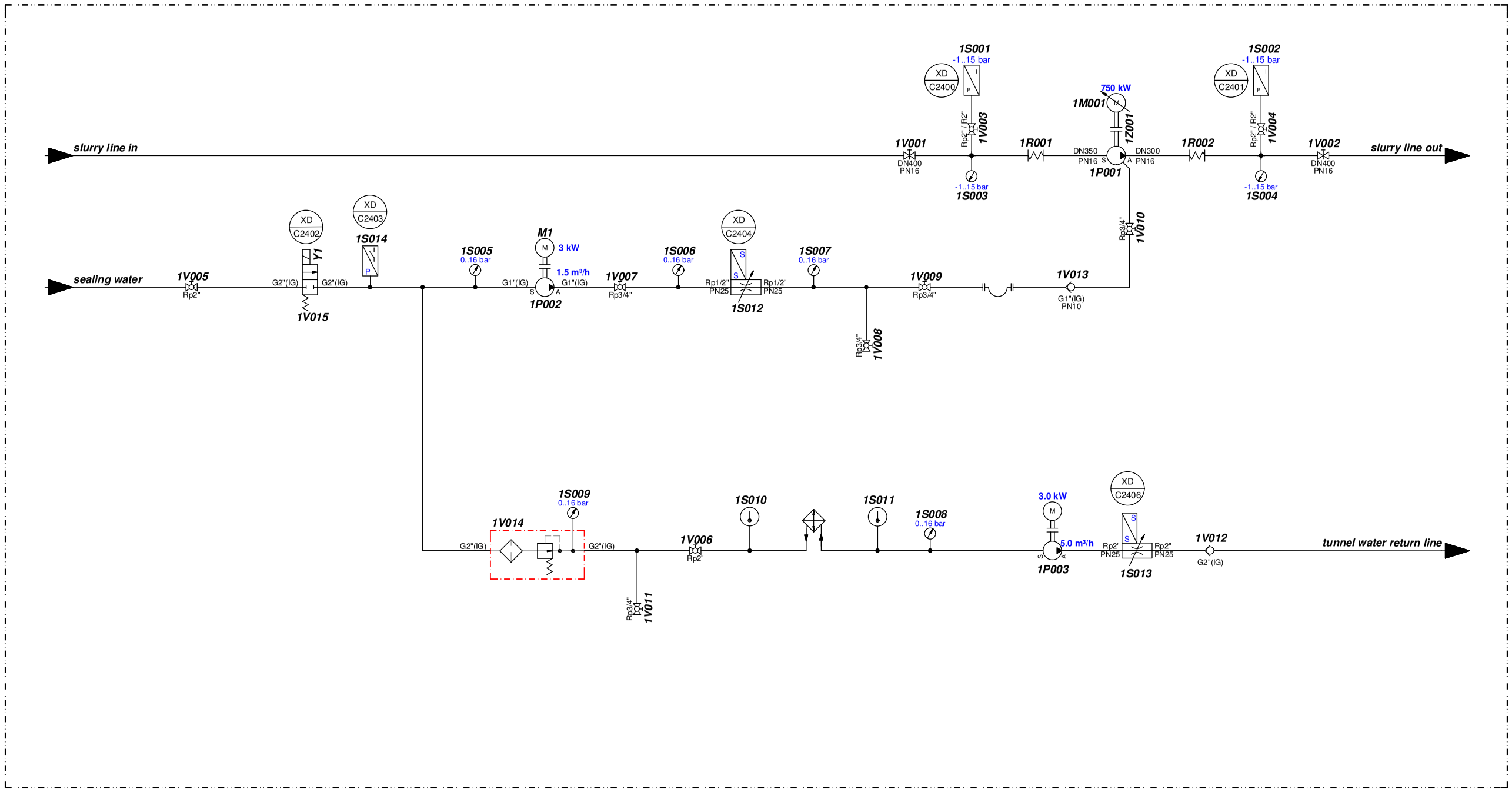

Zur Fertigung freigegeben
unterliegt dem Änderungsdienst

Prüfer: DIETERLS

Datum: 01.07.2010

Index	Revision	Date	Editor	Date	Ch. by
A	1P003 Artikelnummer geändert	01.07.2010	DIETERLS	01.07.2010	DIETERLS
	Konzept ==> Planung	22.06.2010	DIETERLS	22.06.2010	DIETERLS

The reproduction, distribution and utilization of this document as well as the communication of the contents to others without express authorization is prohibited.
Offenders will be held liable for the payment of damages. All rights reserved in the event of a patent, utility model or design. ISO 16016

HERRENKNECHT AG
Schlehenweg 2
D-77963 Schwanau
Tel.: 07824/302-0
Fax: 07824/3403
Info@Herrenknecht.de

HERRENKNECHT
Tunnelvortriebstechnik

	Date	Name
Edited	01.07.2010	DIETERLS
For checking	01.07.2010	DIETERLS
Checked	01.07.2010	DIETERLS

Type of drawing: schematic
Projekt: S-623_624
Material:
Name: Water diagram A2 - S-623_P2.4

Drawing no.	Page no.	Index
2220-03-074-800	1 / 1	A

Norm	Article number	Developed from	Weight/KG	Format
	25265671	S-551		A2

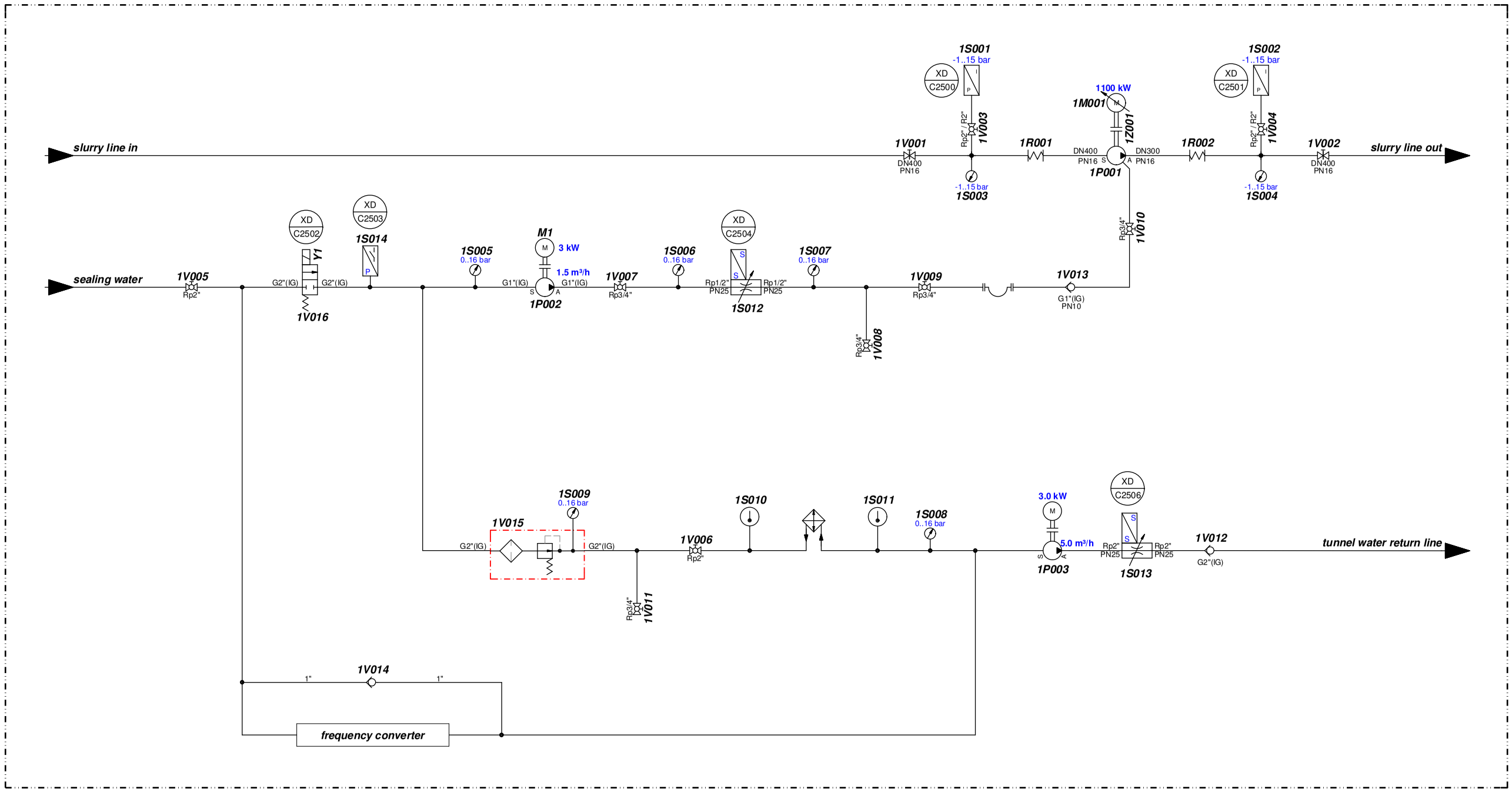

Zur Fertigung freigegeben
unterliegt dem Änderungsdienst

Prüfer: DIETERLS

Datum: 01.07.2010

Index	Revision	Date	Editor	Date	Ch. by
A	1P003 Artikelnummer geändert	01.07.2010	DIETERLS	01.07.2010	DIETERLS
	Konzept ==> Planung	22.06.2010	DIETERLS	22.06.2010	DIETERLS

The reproduction, distribution and utilization of this document as well as the communication of the contents to others without express authorization is prohibited. Offenders will be held liable for the payment of damages. All rights reserved in the event of a patent, utility model or design. ISO 16016

HERRENKNECHT AG
Schlehenweg 2
D-77963 Schwanau
Tel.: 07824/302-0
Fax: 07824/3403
Info@Herrenknecht.de

HERRENKNECHT
Tunnelvortriebstechnik

	Date	Name
Edited	01.07.2010	DIETERLS
For checking	01.07.2010	DIETERLS
Checked	01.07.2010	DIETERLS

Type of drawing: schematic
Projekt: S-623_624
Material:
Name: Water diagram A2 - S-623_P2.5

Drawing no.	Page no.	Index
2220-03-075-800	1 / 1	A

Norm	Article number	Developed from	Weight/KG	Format
	25265672	S-551		A2

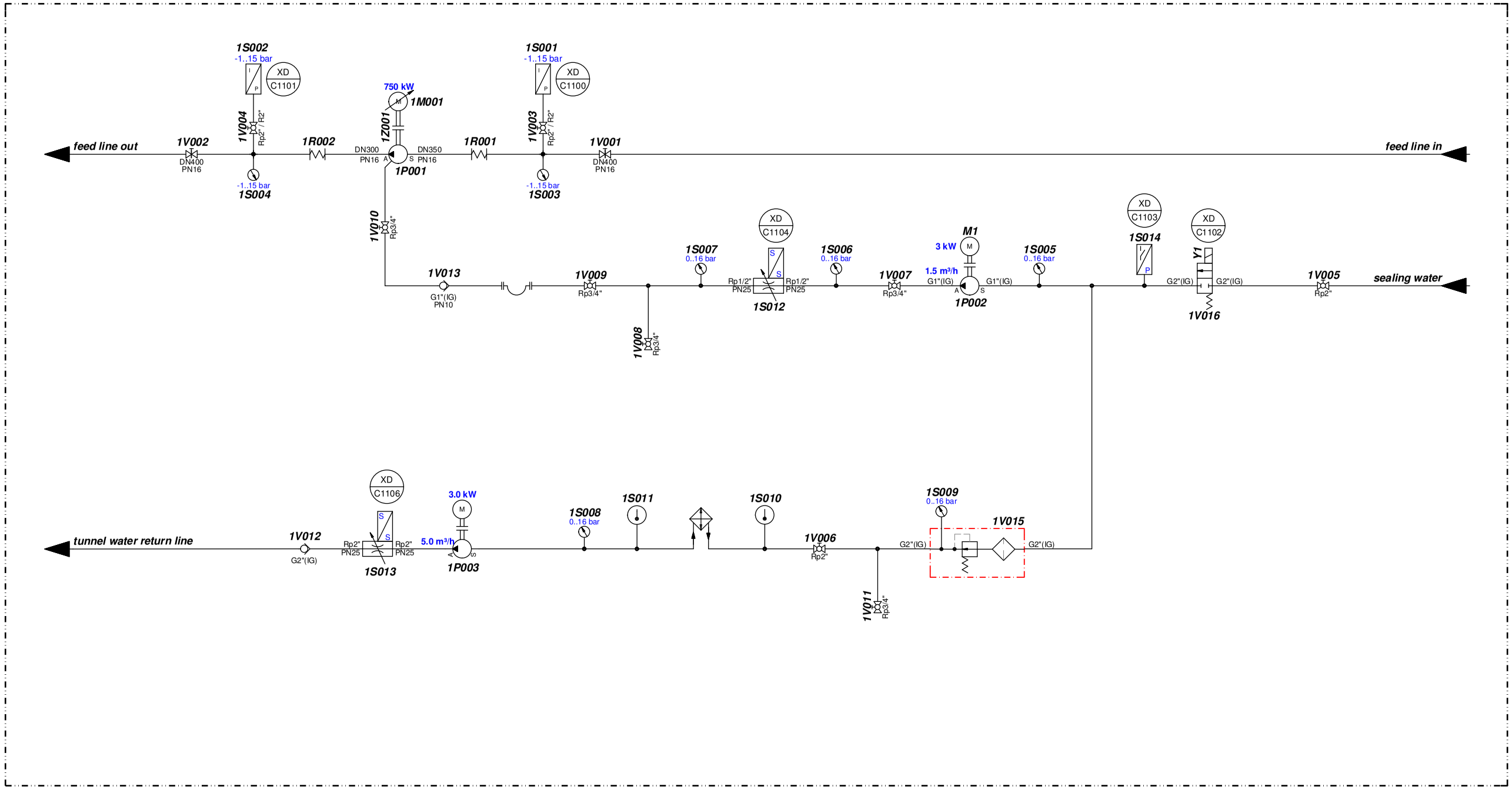

Index	Revision	Date	Editor	Date	Ch. by
A	1P003 Artikelnummer geändert	01.07.2010	DIETERLS	01.07.2010	DIETERLS
	Konzept ==> Planung	22.06.2010	DIETERLS	22.06.2010	DIETERLS

The reproduction, distribution and utilization of this document as well as the communication of the contents to others without express authorization is prohibited. Offenders will be held liable for the payment of damages. All rights reserved in the event of a patent, utility model or design. ISO 16016

HERRENKNECHT AG
Schlehenweg 2
D-77963 Schwanau
Tel.: 07824/302-0
Fax: 07824/3403
Info@Herrenknecht.de

HERRENKNECHT
Tunnelvortriebstechnik

Type of drawing: schematic
Projekt: S-623_624
Material:
Name: Water diagram A2 - S-624_P1.1

	Date	Name
Edited	01.07.2010	DIETERLS
For checking	01.07.2010	DIETERLS
Checked	01.07.2010	DIETERLS

Drawing no.: 2220-03-076-800
Page no.: 1 / 1
Index: A

Norm	Article number	Developed from	Weight/KG	Format
	25265673	S-551		A2

Zur Fertigung freigegeben
unterliegt dem Änderungsdienst

Prüfer: DIETERLS

Datum: 01.07.2010

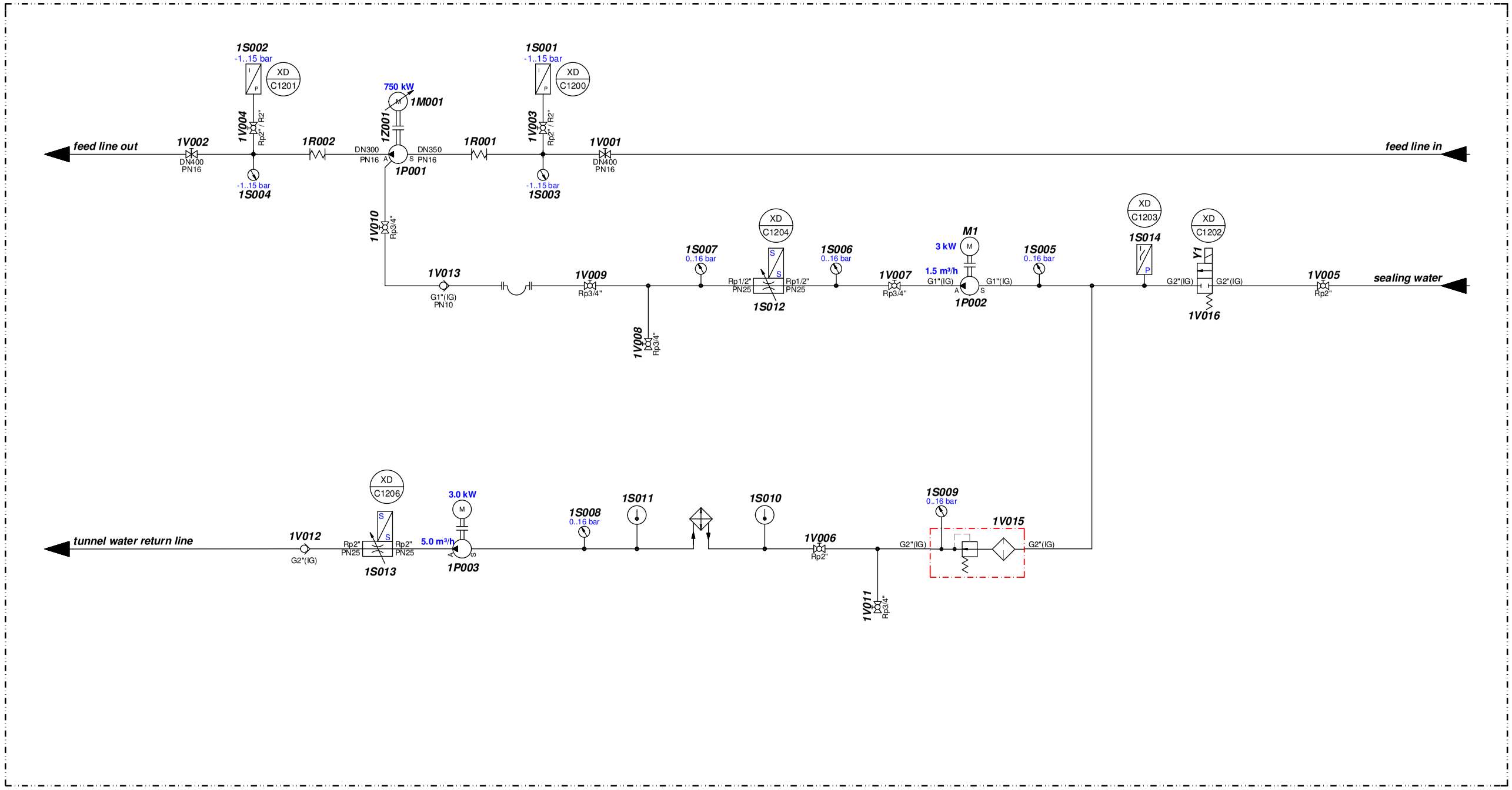

Zur Fertigung freigegeben
unterliegt dem Änderungsdienst

Prüfer: DIETERLS

Datum: 01.07.2010

Index	Revision	Date	Editor	Date	Ch. by
A	1P003 Artikelnummer geändert	01.07.2010	DIETERLS	01.07.2010	DIETERLS
	Konzept ==> Planung	22.06.2010	DIETERLS	22.06.2010	DIETERLS

The reproduction, distribution and utilization of this document as well as the communication of the contents to others without express authorization is prohibited.
Offenders will be held liable for the payment of damages. All rights reserved in the event of a patent, utility model or design. ISO 16016

HERRENKNECHT AG
Schlehenweg 2
D-77963 Schwanau
Tel.: 07824/302-0
Fax: 07824/3403
Info@Herrenknecht.de

HERRENKNECHT
Tunnelvortriebstechnik

	Date	Name
Edited	01.07.2010	DIETERLS
For checking	01.07.2010	DIETERLS
Checked	01.07.2010	DIETERLS

Type of drawing: schematic
Projekt: S-623_624
Material:
Name: Water diagram A2 - S-624_P1.2

Drawing no.	Page no.	Index
2220-03-077-800	1 / 1	A

Norm	Article number	Developed from	Weight/KG	Format
	25265674	S-551		A2

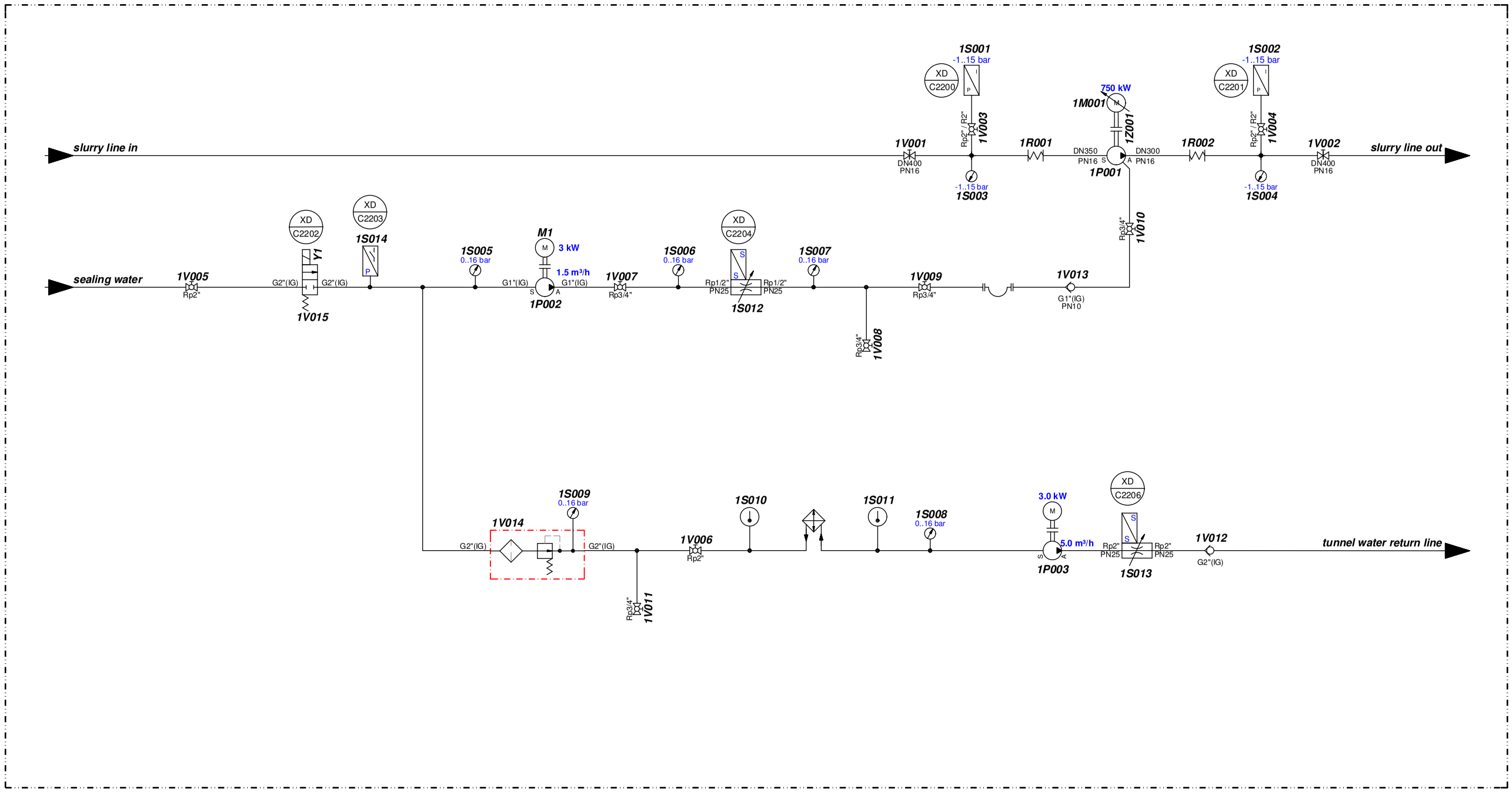

Index	Revision	Date	Editor	Date	Ch. by
A	1P003 Artikelnummer geändert	01.07.2010	DIETERLS	01.07.2010	DIETERLS
	Konzept ==> Planung	22.06.2010	DIETERLS	22.06.2010	DIETERLS

The reproduction, distribution and utilization of this document as well as the communication of the contents to others without express authorization is prohibited. Offenders will be held liable for the payment of damages. All rights reserved in the event of a patent, utility model or design. ISO 16016

Zur Fertigung freigegeben
unterliegt dem Änderungsdienst

Prüfer: DIETERLS

Datum: 01.07.2010

HERRENKNECHT AG
Schlehenweg 2
D-77963 Schwanau
Tel.: 07824/302-0
Fax: 07824/3403
Info@Herrenknecht.de

HERRENKNECHT
Tunnelvortriebstechnik

	Date	Name
Edited	01.07.2010	DIETERLS
For checking	01.07.2010	DIETERLS
Checked	01.07.2010	DIETERLS

Type of drawing: schematic
Projekt: S-623_624
Material:
Name: Water diagram A2 - S-624_P2.2

Drawing no.	Page no.	Index
2220-03-078-800	1 / 1	A

Norm	Article number	Developed from	Weight/KG	Format
	25265675	S-551		A2

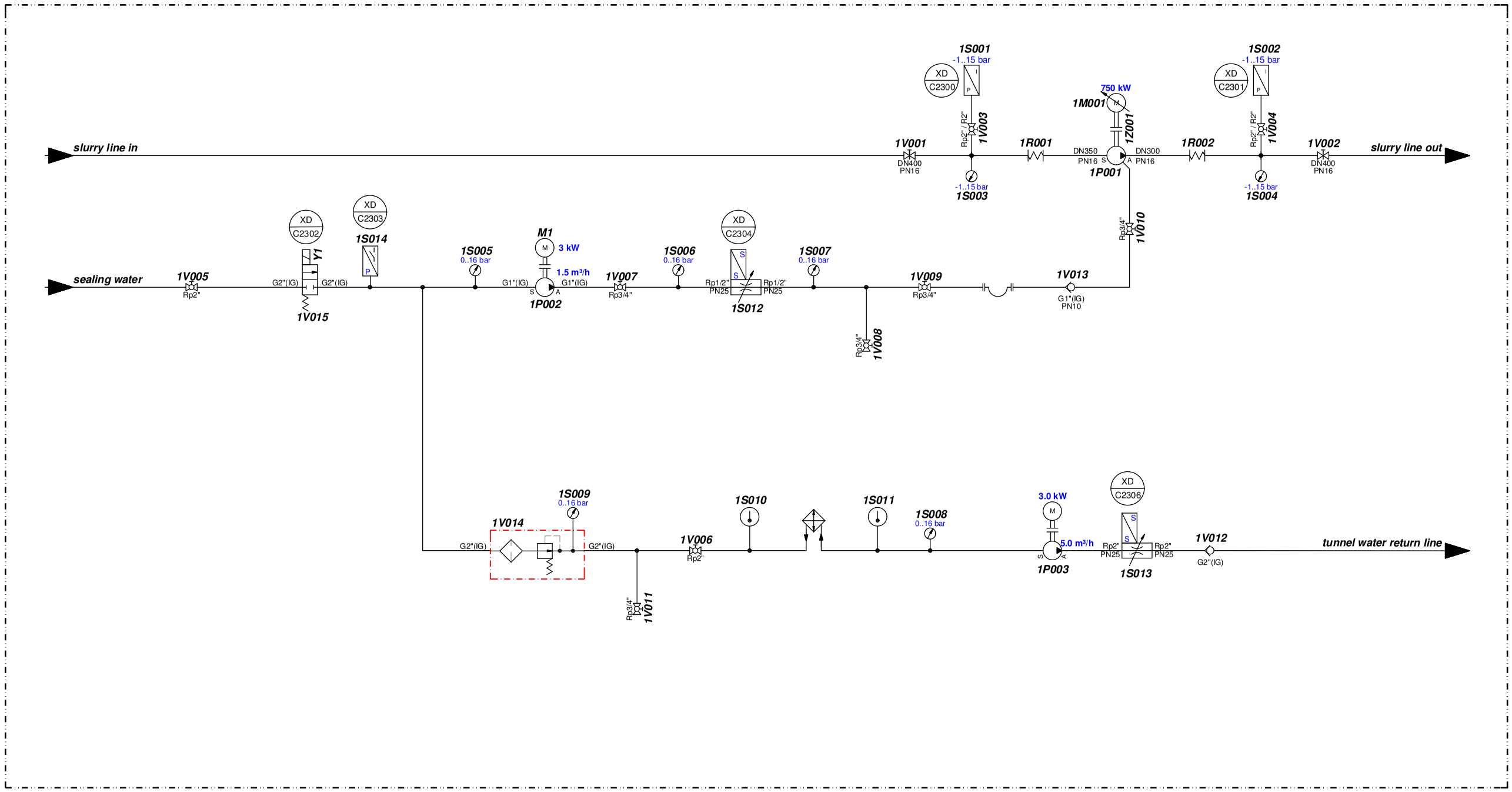

Zur Fertigung freigegeben
unterliegt dem Änderungsdienst

Prüfer: DIETERLS

Datum: 01.07.2010

Index	Revision	Date	Editor	Date	Ch. by
A	1P003 Artikelnummer geändert	01.07.2010	DIETERLS	01.07.2010	DIETERLS
	Konzept ==> Planung	22.06.2010	DIETERLS	22.06.2010	DIETERLS

The reproduction, distribution and utilization of this document as well as the communication of the contents to others without express authorization is prohibited.
Offenders will be held liable for the payment of damages. All rights reserved in the event of a patent, utility model or design. ISO 16016

HERRENKNECHT AG
Schlehenweg 2
D-77963 Schwanau
Tel.: 07824/302-0
Fax: 07824/3403
Info@Herrenknecht.de

HERRENKNECHT
Tunnelvortriebstechnik

	Date	Name
Edited	01.07.2010	DIETERLS
For checking	01.07.2010	DIETERLS
Checked	01.07.2010	DIETERLS

Type of drawing: schematic
Projekt: S-623_624
Material:
Name: Water diagram A2 - S-624_P2.3

Drawing no.	Page no.	Index
2220-03-079-800	1 / 1	A

Norm	Article number	Developed from	Weight/KG	Format
	25265676	S-551		A2

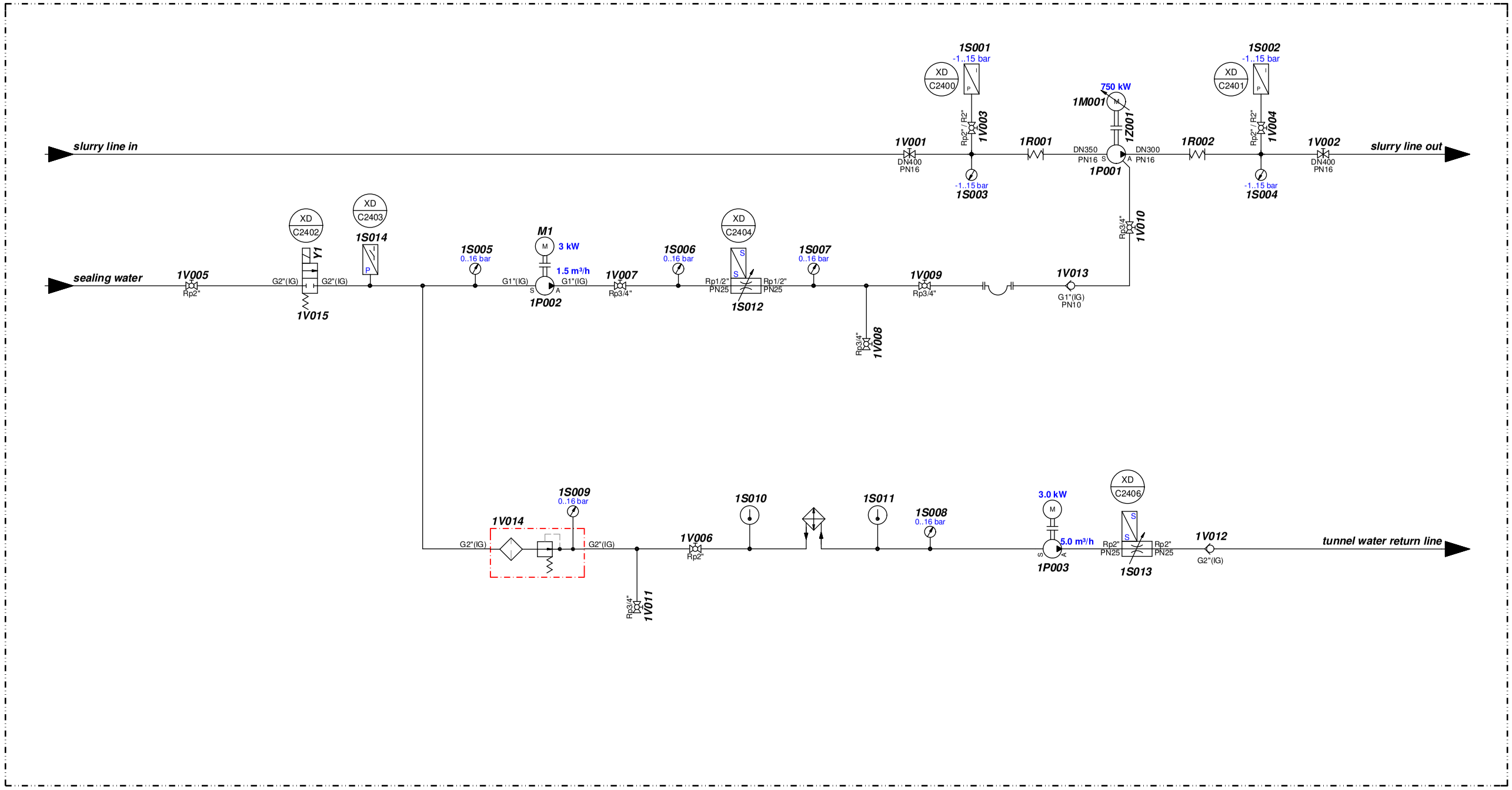

Zur Fertigung freigegeben
unterliegt dem Änderungsdienst

Prüfer: DIETERLS

Datum: 01.07.2010

Index	Revision	Date	Editor	Date	Ch. by
A	1P003 Artikelnummer geändert	01.07.2010	DIETERLS	01.07.2010	DIETERLS
	Konzept ==> Planung	22.06.2010	DIETERLS	22.06.2010	DIETERLS

The reproduction, distribution and utilization of this document as well as the communication of the contents to others without express authorization is prohibited.
Offenders will be held liable for the payment of damages. All rights reserved in the event of a patent, utility model or design. ISO 16016

HERRENKNECHT AG
Schlehenweg 2
D-77963 Schwanau
Tel.: 07824/302-0
Fax: 07824/3403
Info@Herrenknecht.de

HERRENKNECHT
Tunnelvortriebstechnik

	Date	Name
Edited	01.07.2010	DIETERLS
For checking	01.07.2010	DIETERLS
Checked	01.07.2010	DIETERLS

Type of drawing: schematic
Projekt: S-623_624
Material:
Name: Water diagram A2 - S-624_P2.4

Drawing no.	Page no.	Index
2220-03-080-800	1 / 1	A

Norm	Article number	Developed from	Weight/KG	Format
	25265677	S-551		A2

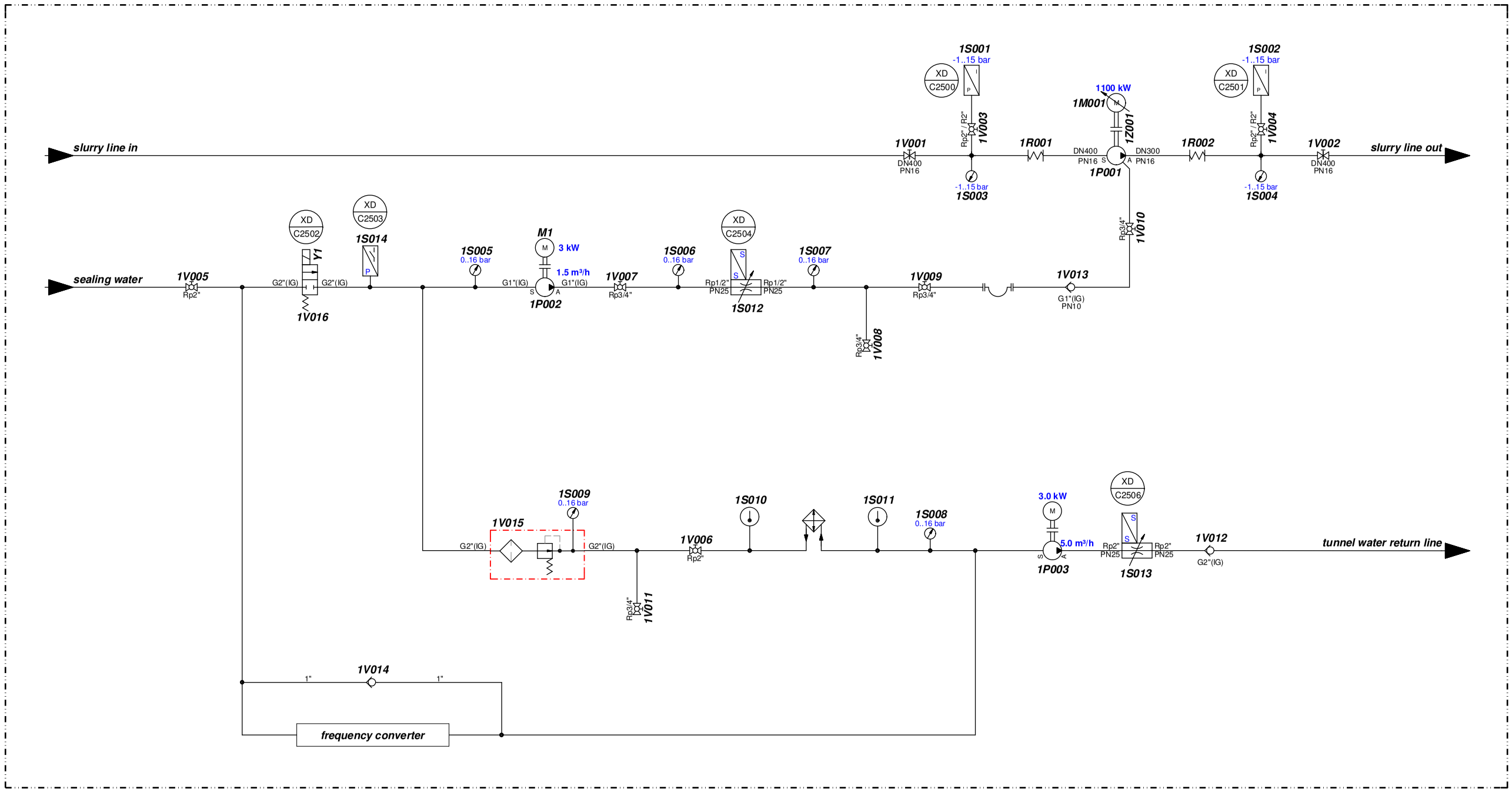

Zur Fertigung freigegeben
unterliegt dem Änderungsdienst

Prüfer: DIETERLS

Datum: 01.07.2010

Index	Revision	Date	Editor	Date	Ch. by
A	1P003 Artikelnummer geändert	01.07.2010	DIETERLS	01.07.2010	DIETERLS
	Konzept ==> Planung	22.06.2010	DIETERLS	22.06.2010	DIETERLS

The reproduction, distribution and utilization of this document as well as the communication of the contents to others without express authorization is prohibited. Offenders will be held liable for the payment of damages. All rights reserved in the event of a patent, utility model or design. ISO 16016

HERRENKNECHT AG
Schlehenweg 2
D-77963 Schwanau
Tel.: 07824/302-0
Fax: 07824/3403
Info@Herrenknecht.de

HERRENKNECHT
Tunnelvortriebstechnik

	Date	Name
Edited	01.07.2010	DIETERLS
For checking	01.07.2010	DIETERLS
Checked	01.07.2010	DIETERLS

Type of drawing: schematic
Projekt: S-623_624
Material:
Name: Water diagram A2 - S-624_P2.5

Drawing no.	Page no.	Index
2220-03-081-800	1 / 1	A

Norm	Article number	Developed from	Weight/KG	Format
	25265678	S-551		A2

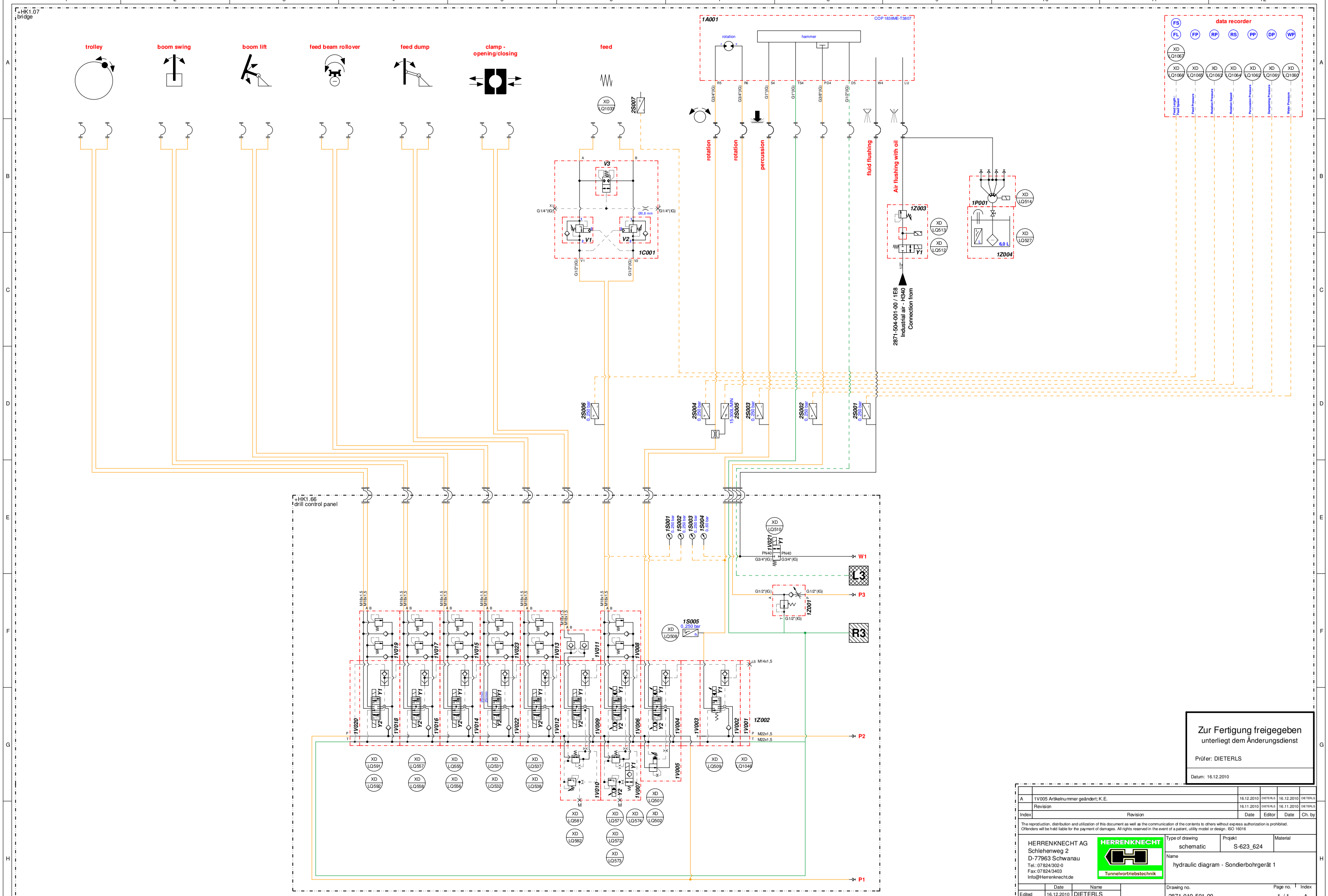

Zur Fertigung freigegeben
unterliegt dem Änderungsdienst

Prüfer: DIETERLS

Datum: 16.12.2010

Index	Revision	Date	Editor	Date	Ch. by
A	1V005 Artikelnummer geändert; K.E.	16.12.2010	DIETERLS	16.12.2010	DIETERLS
	Revision	16.11.2010	DIETERLS	16.11.2010	DIETERLS

The reproduction, distribution and utilization of this document as well as the communication of the contents to others without express authorization is prohibited.
Offenders will be held liable for the payment of damages. All rights reserved in the event of a patent, utility model or design. ISO 16016

HERRENKNECHT AG
Schlehenweg 2
D-77963 Schwanau
Tel.: 07824/302-0
Fax: 07824/3403
Info@Herrenknecht.de

HERRENKNECHT
Tunnelvortriebstechnik

Type of drawing	Projekt	Material
schematic	S-623_624	

Name
hydraulic diagram - Sondierbohrgerät 1

	Date	Name
Edited	16.12.2010	DIETERLS
For checking	16.12.2010	DIETERLS
Checked	16.12.2010	DIETERLS

Drawing no.	Page no.	Index
2871-019-501-00	1 / 1	A

Norm	Article number	Developed from	Weight/KG	Format
	25266240	S-551		A1

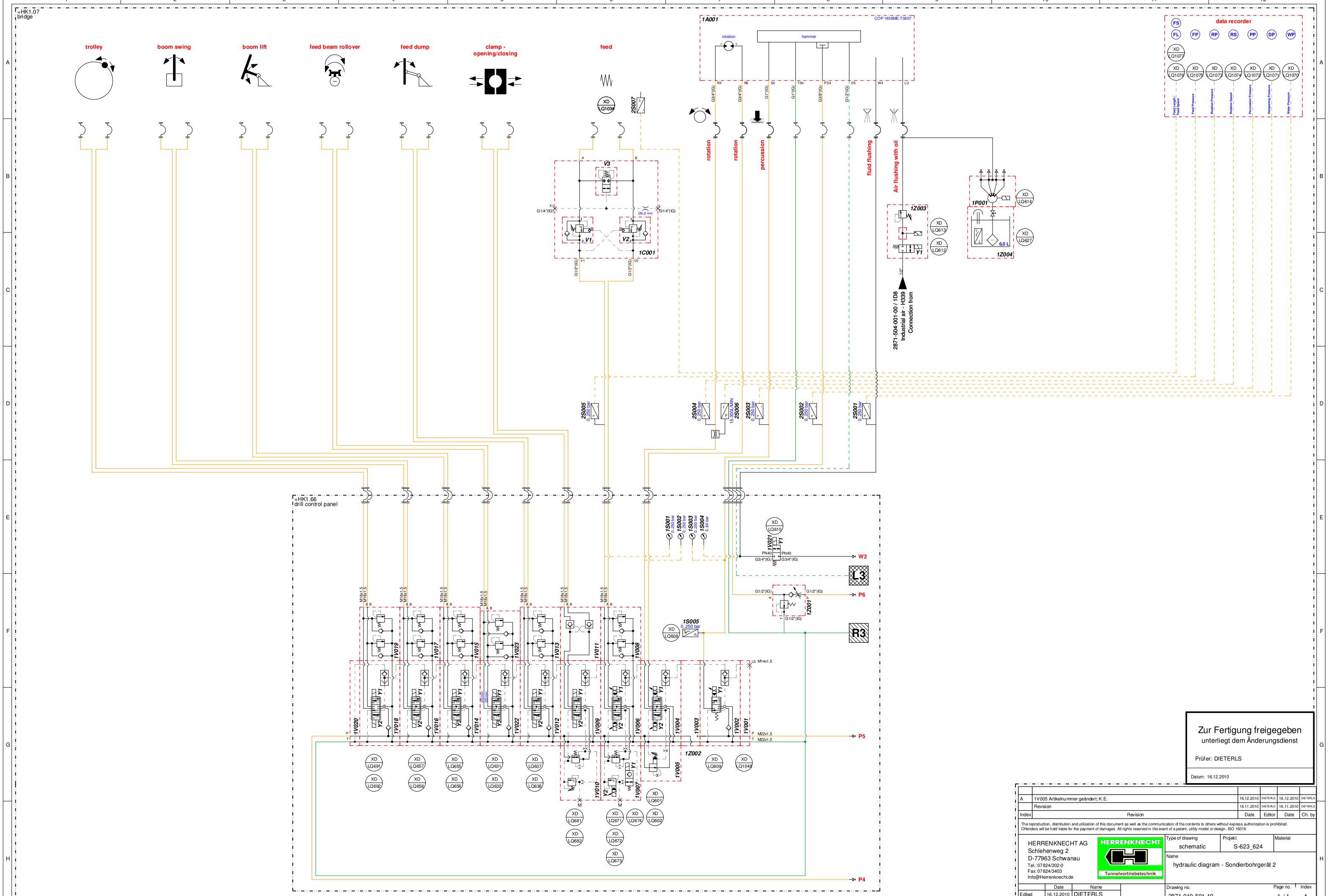

Zur Fertigung freigegeben
unterliegt dem Änderungsdienst

Prüfer: DIETERLS

Datum: 16.12.2010

Index	Revision	Date	Editor	Date	Ch. by
A	1V005 Artikelnummer geändert; K.E.	16.12.2010	DIETERLS	16.12.2010	DIETERLS
	Revision	16.11.2010	DIETERLS	16.11.2010	DIETERLS

The reproduction, distribution and utilization of this document as well as the communication of the contents to others without express authorization is prohibited.
Offenders will be held liable for the payment of damages. All rights reserved in the event of a patent, utility model or design. ISO 16016

HERRENKNECHT AG
Schlehenweg 2
D-77963 Schwanau
Tel.: 07824/302-0
Fax: 07824/3403
Info@Herrenknecht.de

HERRENKNECHT
Tunnelvortriebstechnik

Type of drawing: schematic
Projekt: S-623_624
Material:
Name: hydraulic diagram - Sondierbohrgerät 2

	Date	Name
Edited	16.12.2010	DIETERLS
For checking	16.12.2010	DIETERLS
Checked	16.12.2010	DIETERLS

Drawing no.: 2871-019-501-10
Page no.: 1 / 1
Index: A

Norm	Article number	Developed from	Weight/KG	Format
	25266366	S-551		A1

+HK1.03
erector

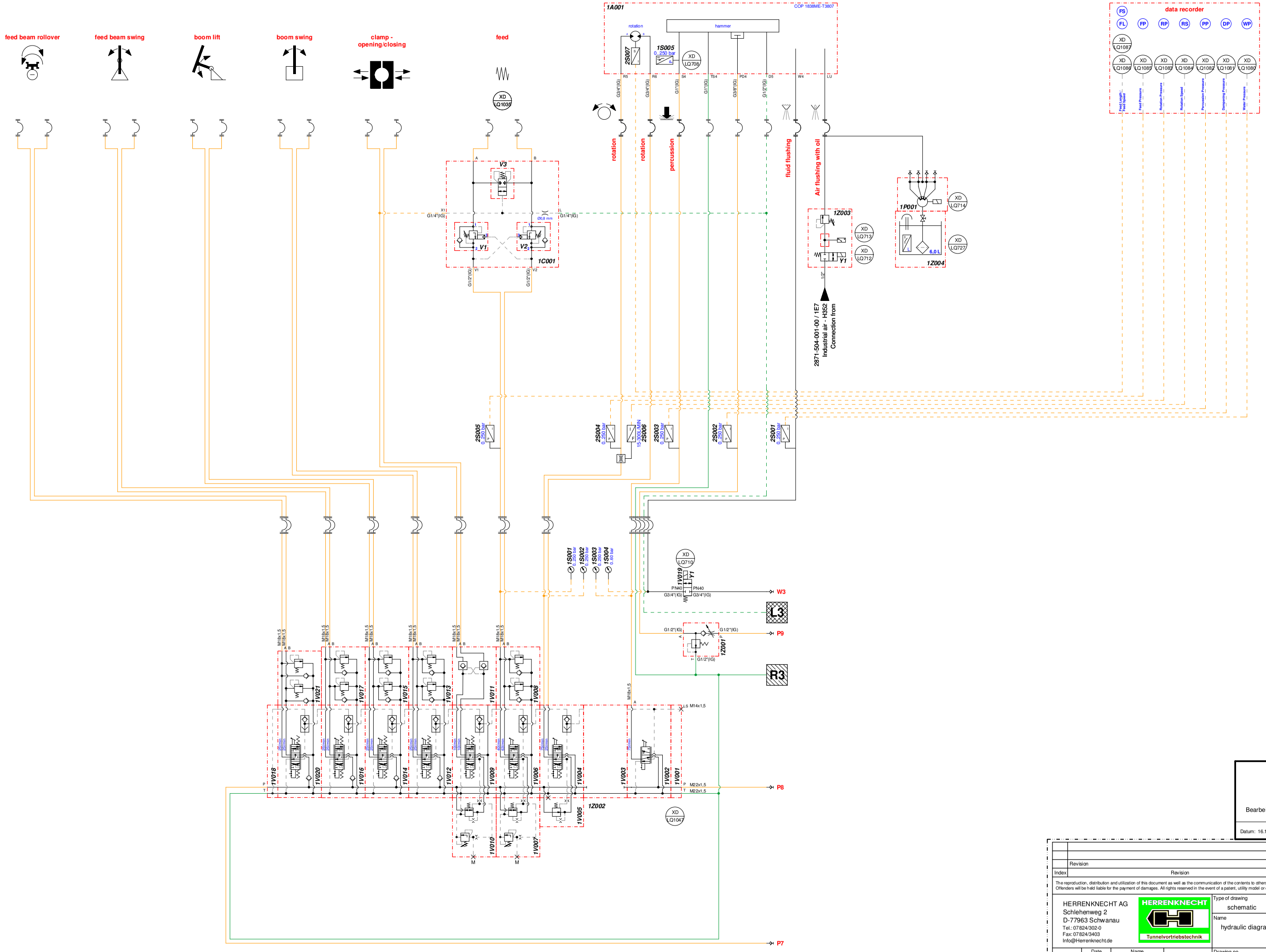

In Arbeit

Bearbeiter: DIETERLS

Datum: 16.11.2010

Index	Revision	Date	Editor	Date	Ch. by
	Revision	16.11.2010	DIETERLS	16.11.2010	DIETERLS

The reproduction, distribution and utilization of this document as well as the communication of the contents to others without express authorization is prohibited. Offenders will be held liable for the payment of damages. All rights reserved in the event of a patent, utility model or design. ISO 16016

HERRENKNECHT AG
Schlehenweg 2
D-77963 Schwanau
Tel.: 07824/302-0
Fax: 07824/3403
Info@Herrenknecht.de

HERRENKNECHT
Tunnelvortriebstechnik

Type of drawing	Projekt	Material
schematic	S-623_624	

Name
hydraulic diagram - Sondierbohrgerät 3

	Date	Name
Edited	16.11.2010	DIETERLS
For checking	16.11.2010	DIETERLS
Checked	16.11.2010	DIETERLS

Drawing no.	Page no.	Index
2871-019-501-20	1 / 1	

Norm	Article number	Developed from	Weight/KG	Format
	25266367	S-551		A1

+HK1.01
shield

Connection to
Thrust cylinder - H009
2871-501-001-00 / 4H1

Connection to
Thrust cylinder - H005
2871-501-001-00 / 2H1

Connection to
Thrust cylinder - H051
2871-501-001-00 / 2H2

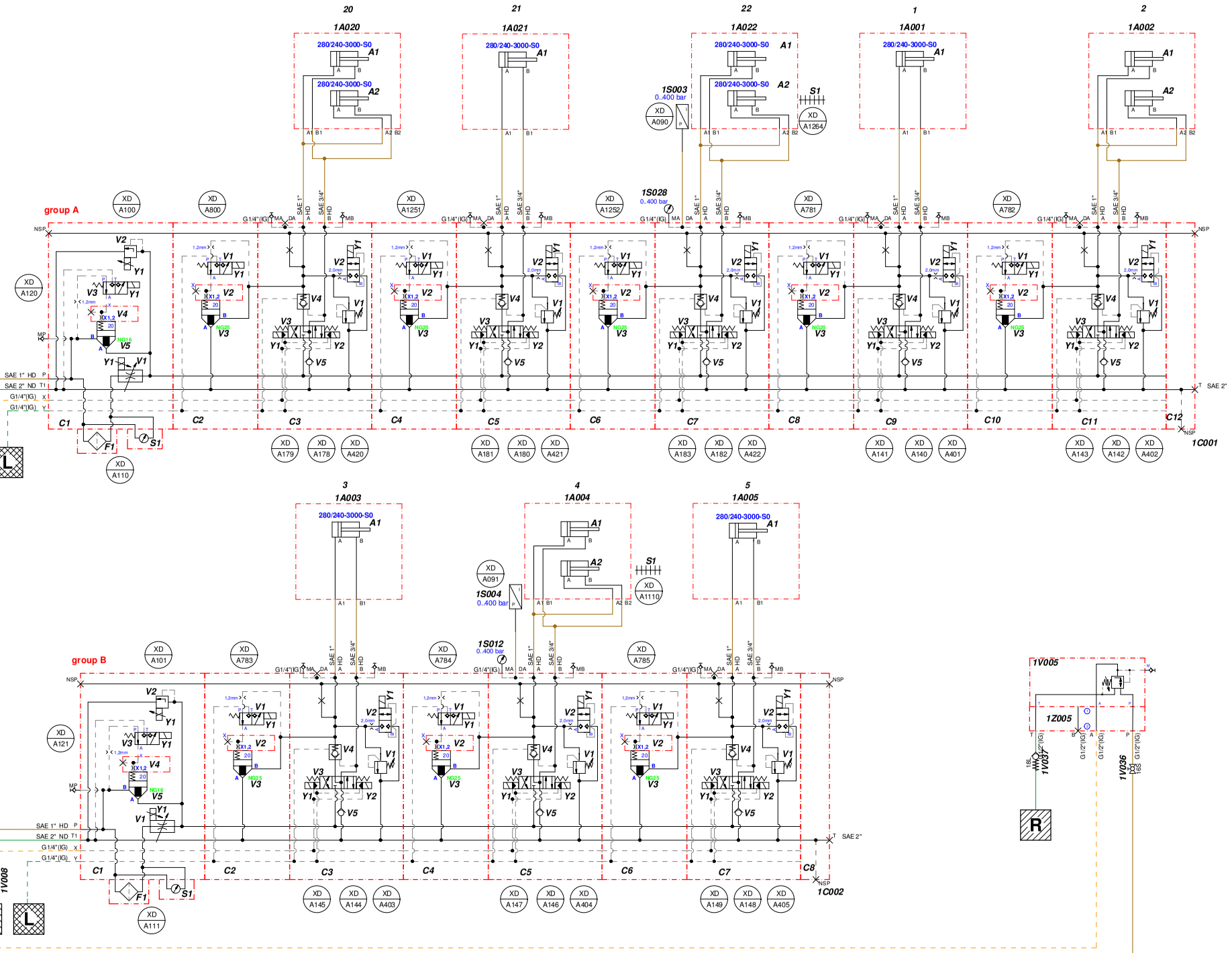

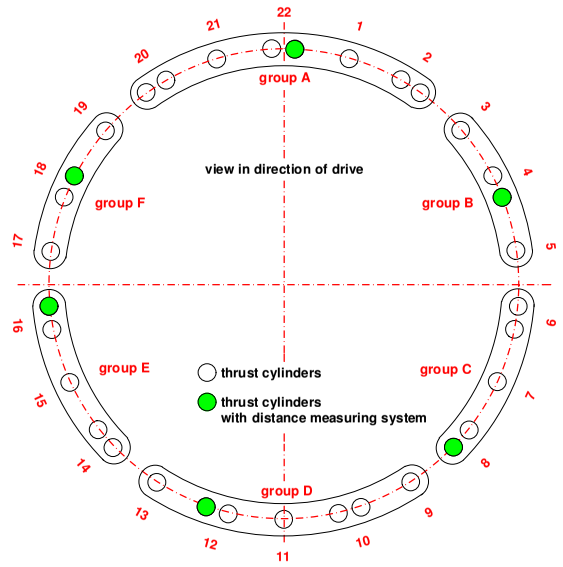

Connection to
Shield equipments - H402
2871-501-004-00 / 1E3

+HK1.08
gantry 1

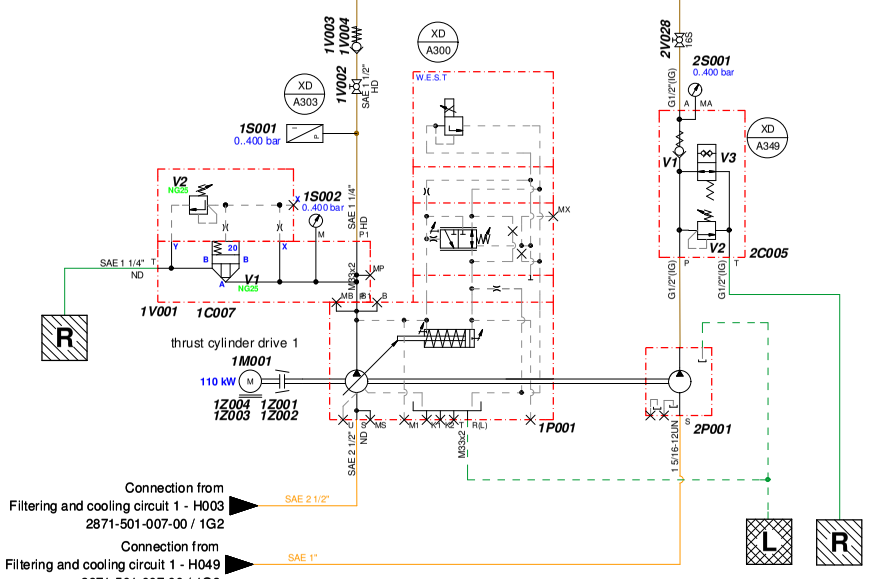

Connection from
Filtering and cooling circuit 1 - H003
2871-501-007-00 / 1G2

Connection from
Filtering and cooling circuit 1 - H049
2871-501-007-00 / 1G3

Zur Fertigung freigegeben
unterliegt dem Änderungsdienst

Prüfer: KATOW

Datum: 04.01.2011

Index	Revision	Date	Editor	Date	Ch. by
A	1Z001 (H4) Art.Nr. geändert, k.E.	25.10.2010	EISELSBW	04.01.2011	KATOW
	Konzept ==> Schema	29.06.2010	EISELSBW	05.07.2010	KATOW

The reproduction, distribution and utilization of this document as well as the communication of the contents to others without express authorization is prohibited. Offenders will be held liable for the payment of damages. All rights reserved in the event of a patent, utility model or design. ISO 16016

HERRENKNECHT AG
Schlehenweg 2
D-77963 Schwanau
Tel.: 07824/302-0
Fax: 07824/3403
Info@Herrenknecht.de

HERRENKNECHT
Tunnelvortriebstechnik

	Date	Name
Edited	25.10.2010	EISELSBW
For checking	04.01.2011	KATOW
Checked	04.01.2011	KATOW

Type of drawing: schematic
Projekt: S-623_624
Material:
Name: hydraulic diagram - Thrust cylinder

Drawing no.	Page no.	Index
2871-501-001-00	1 / 4	A

Norm	Article number	Developed from	Weight/KG	Format
	25265872	S-551		A1

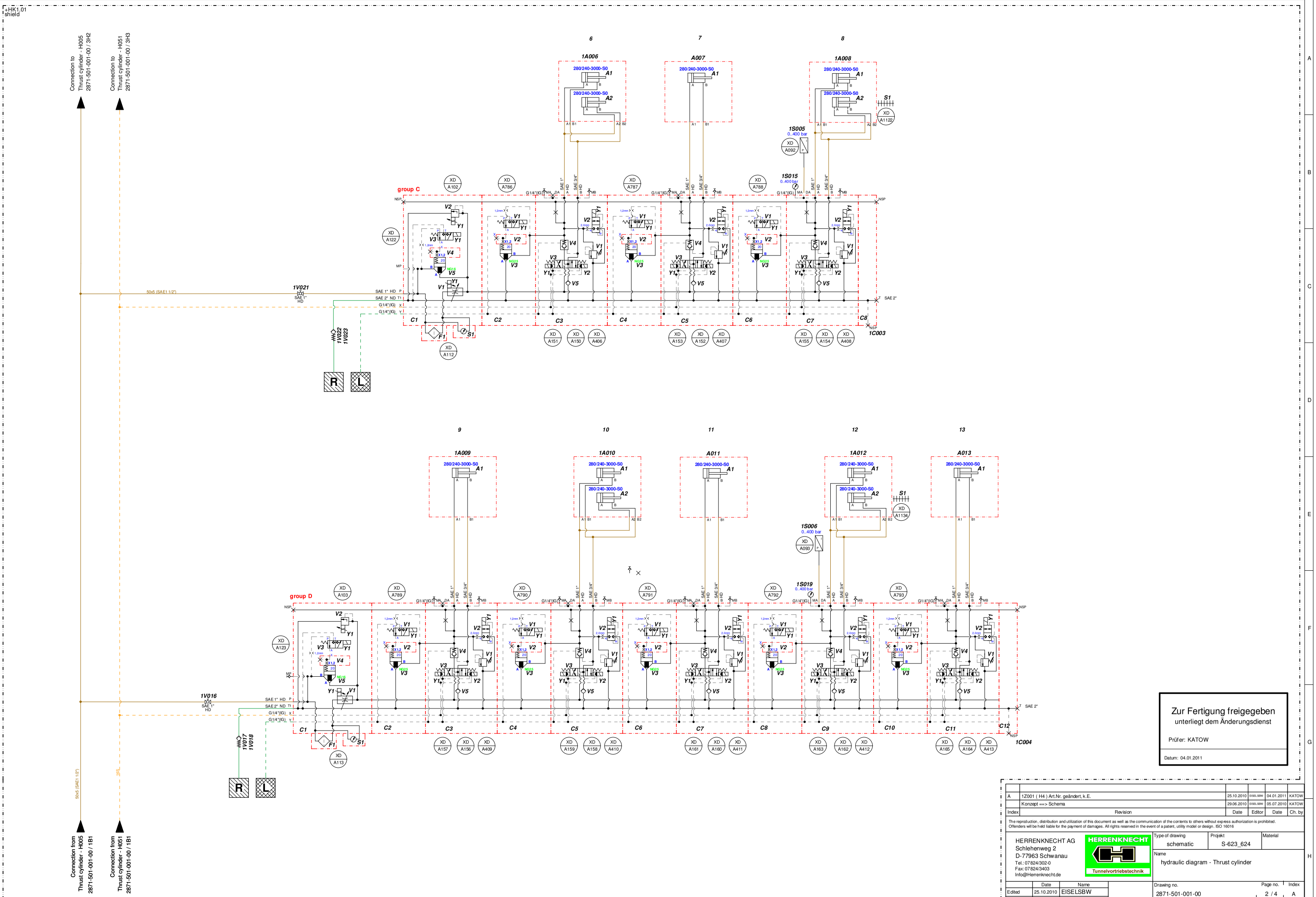

Zur Fertigung freigegeben
unterliegt dem Änderungsdienst

Prüfer: KATOW

Datum: 04.01.2011

Index	Revision	Date	Editor	Date	Ch. by
A	1Z001 (H4) Art.Nr. geändert, k.E.	25.10.2010	EISELSBW	04.01.2011	KATOW
	Konzept ==> Schema	29.06.2010	EISELSBW	05.07.2010	KATOW

The reproduction, distribution and utilization of this document as well as the communication of the contents to others without express authorization is prohibited.
Offenders will be held liable for the payment of damages. All rights reserved in the event of a patent, utility model or design. ISO 16016

HERRENKNECHT AG
Schlehenweg 2
D-77963 Schwanau
Tel.: 07824/302-0
Fax: 07824/3403
Info@Herrenknecht.de

HERRENKNECHT
Tunnelvortriebstechnik

Type of drawing: schematic
Projekt: S-623_624
Material:
Name: hydraulic diagram - Thrust cylinder

	Date	Name
Edited	25.10.2010	EISELSBW
For checking	04.01.2011	KATOW
Checked	04.01.2011	KATOW

Drawing no.: 2871-501-001-00
Page no.: 2 / 4
Index: A

Norm	Article number	Developed from	Weight/KG	Format
	25265872	S-551		A1

+HK1.01
shield

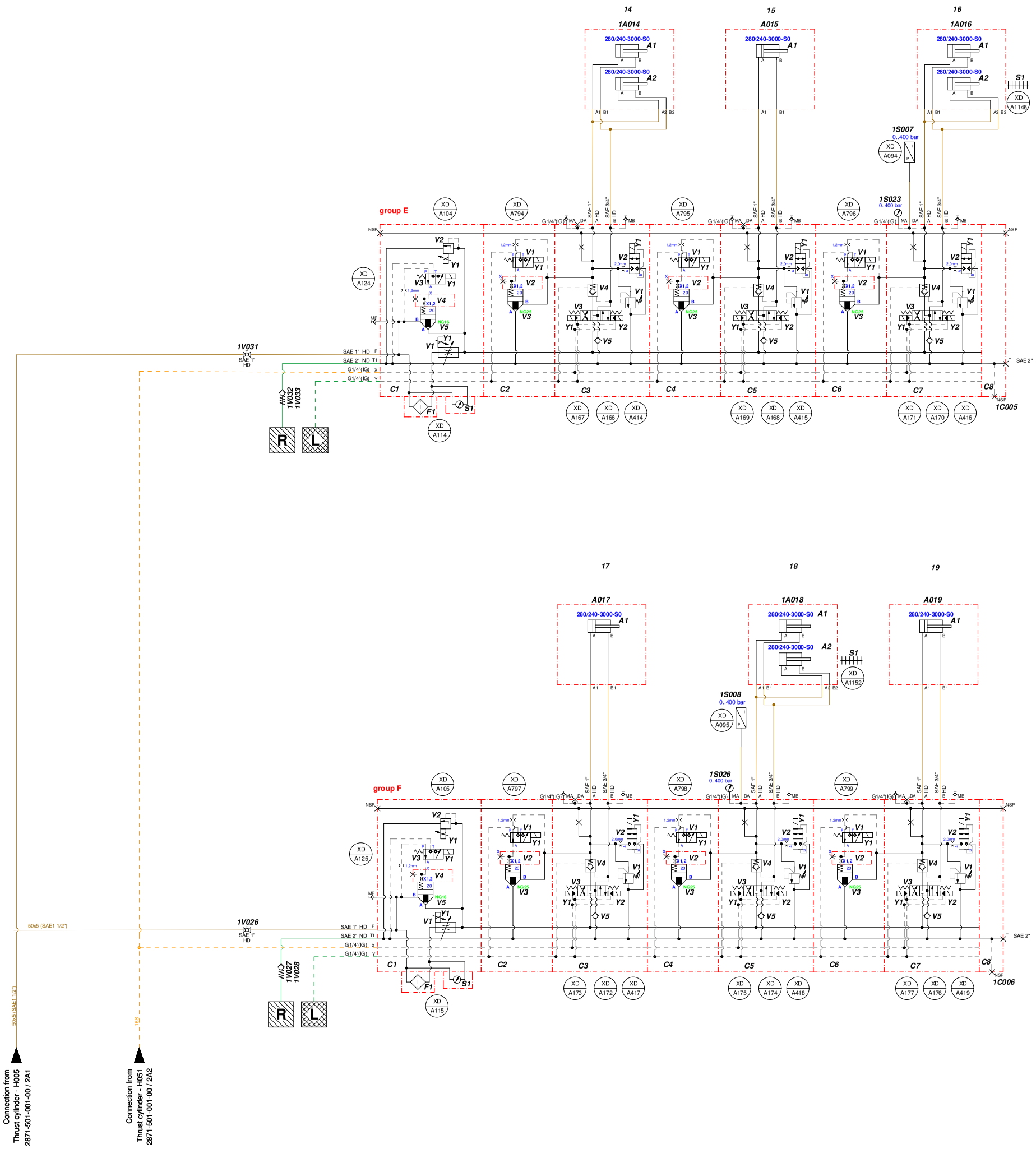

Zur Fertigung freigegeben
unterliegt dem Änderungsdienst

Prüfer: KATOW

Datum: 04.01.2011

Index	Revision	Date	Editor	Date	Ch. by
A	1Z001 (H4) Art.Nr. geändert, k.E.	25.10.2010	EISELSBW	04.01.2011	KATOW
	Konzept ==> Schema	29.06.2010	EISELSBW	05.07.2010	KATOW

The reproduction, distribution and utilization of this document as well as the communication of the contents to others without express authorization is prohibited. Offenders will be held liable for the payment of damages. All rights reserved in the event of a patent, utility model or design. ISO 16016

HERRENKNECHT AG
Schlehenweg 2
D-77963 Schwanau
Tel.: 07824/302-0
Fax: 07824/3403
Info@Herrenknecht.de

HERRENKNECHT
Tunnelvortriebstechnik

	Date	Name
Edited	25.10.2010	EISELSBW
For checking	04.01.2011	KATOW
Checked	04.01.2011	KATOW

Type of drawing: schematic
Projekt: S-623_624
Material:
Name: hydraulic diagram - Thrust cylinder

Drawing no.	Page no.	Index
2871-501-001-00	3 / 4	A

Norm	Article number	Developed from	Weight/KG	Format
	25265872	S-551		A1

+HK1.01
shield

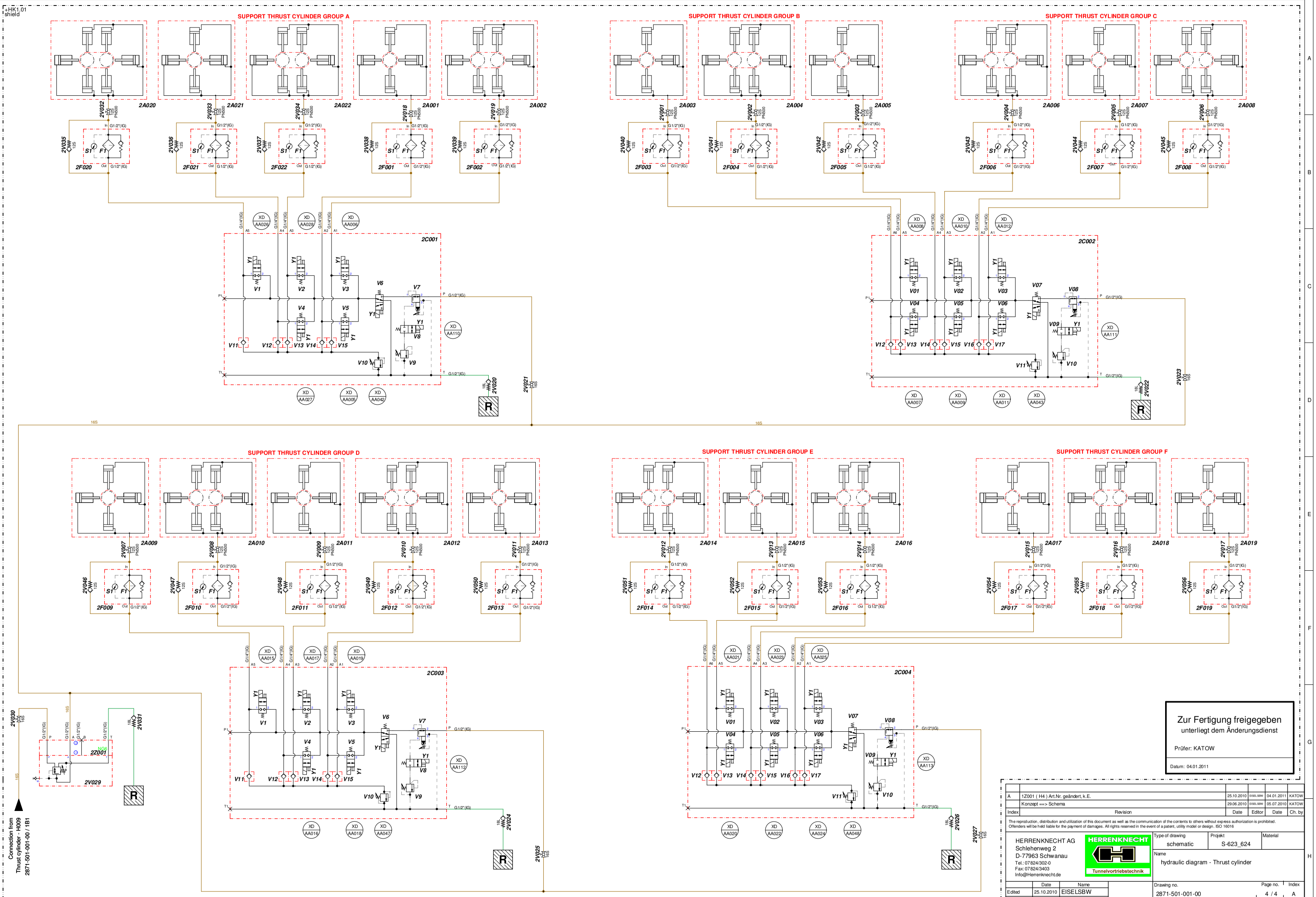

Zur Fertigung freigegeben
unterliegt dem Änderungsdienst

Prüfer: KATOW

Datum: 04.01.2011

Index	Revision	Date	Editor	Date	Ch. by
A	1Z001 (H4) Art.Nr. geändert, k.E.	25.10.2010	EISELSBW	04.01.2011	KATOW
	Konzept ==> Schema	29.06.2010	EISELSBW	05.07.2010	KATOW

The reproduction, distribution and utilization of this document as well as the communication of the contents to others without express authorization is prohibited.
Offenders will be held liable for the payment of damages. All rights reserved in the event of a patent, utility model or design. ISO 16016

HERRENKNECHT AG
Schlehenweg 2
D-77963 Schwanau
Tel.: 07824/302-0
Fax: 07824/3403
Info@Herrenknecht.de

HERRENKNECHT
Tunnelvortriebstechnik

Type of drawing: schematic
Projekt: S-623_624
Material:
Name: hydraulic diagram - Thrust cylinder

	Date	Name
Edited	25.10.2010	EISELSBW
For checking	04.01.2011	KATOW
Checked	04.01.2011	KATOW

Drawing no.	Page no.	Index
2871-501-001-00	4 / 4	A

Norm	Article number	Developed from	Weight/KG	Format
	25265872	S-551		A1

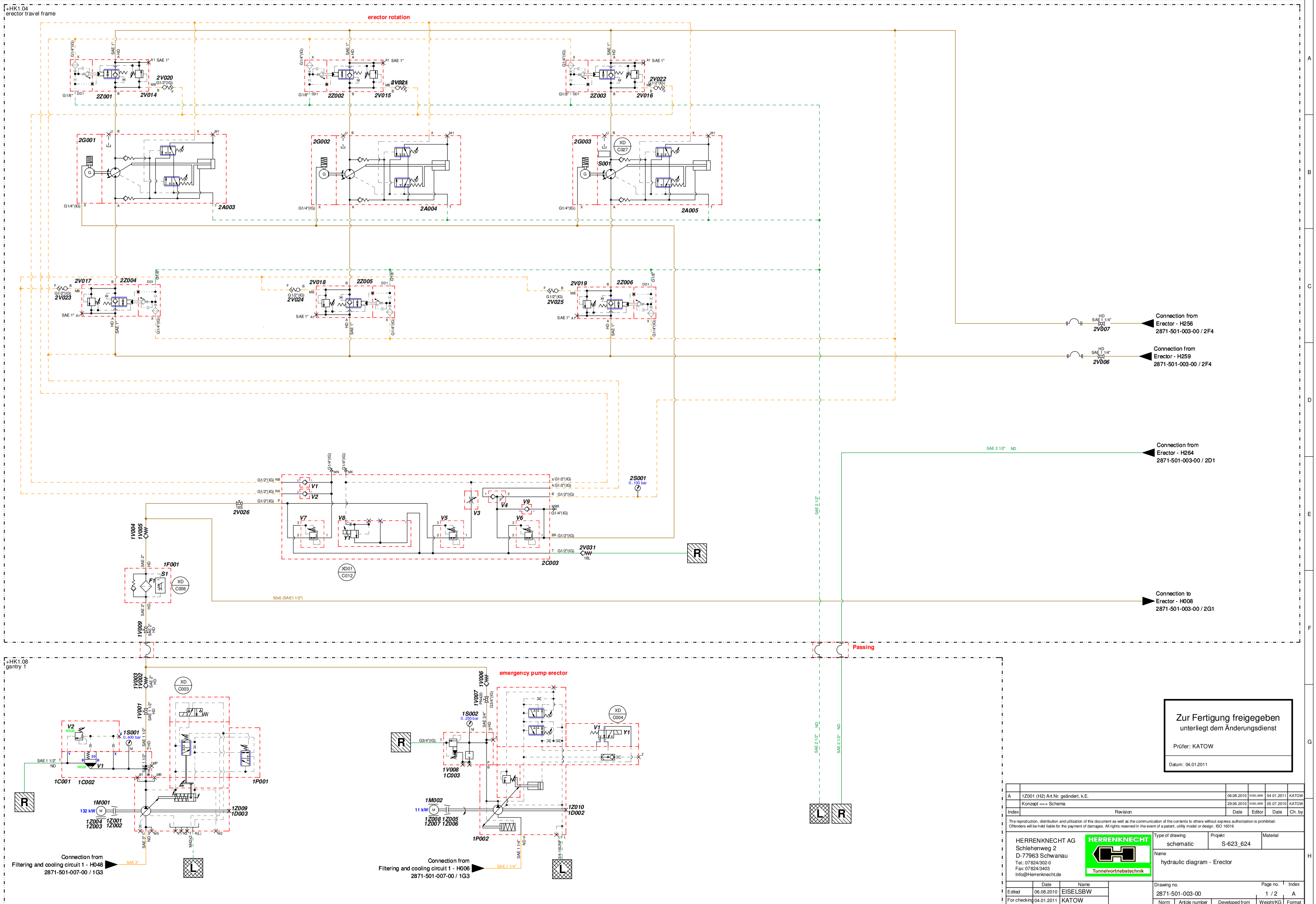

Zur Fertigung freigegeben
unterliegt dem Änderungsdienst

Prüfer: KATOW

Datum: 04.01.2011

Index	Revision	Date	Editor	Date	Ch. by
A	1Z001 (H2) Art.Nr. geändert, k.E.	06.08.2010	EISELSBW	04.01.2011	KATOW
	Konzept ==> Schema	29.06.2010	EISELSBW	05.07.2010	KATOW

The reproduction, distribution and utilization of this document as well as the communication of the contents to others without express authorization is prohibited. Offenders will be held liable for the payment of damages. All rights reserved in the event of a patent, utility model or design. ISO 16016

HERRENKNECHT AG
Schlehenweg 2
D-77963 Schwanau
Tel.: 07824/302-0
Fax: 07824/3403
Info@Herrenknecht.de

HERRENKNECHT
Tunnelvortriebstechnik

Type of drawing	Projekt	Material
schematic	S-623_624	

Name
hydraulic diagram - Erector

	Date	Name
Edited	06.08.2010	EISELSBW
For checking	04.01.2011	KATOW
Checked	04.01.2011	KATOW

Drawing no.	Page no.	Index
2871-501-003-00	1 / 2	A

Norm	Article number	Developed from	Weight/KG	Format
	25265873	S-551		A1

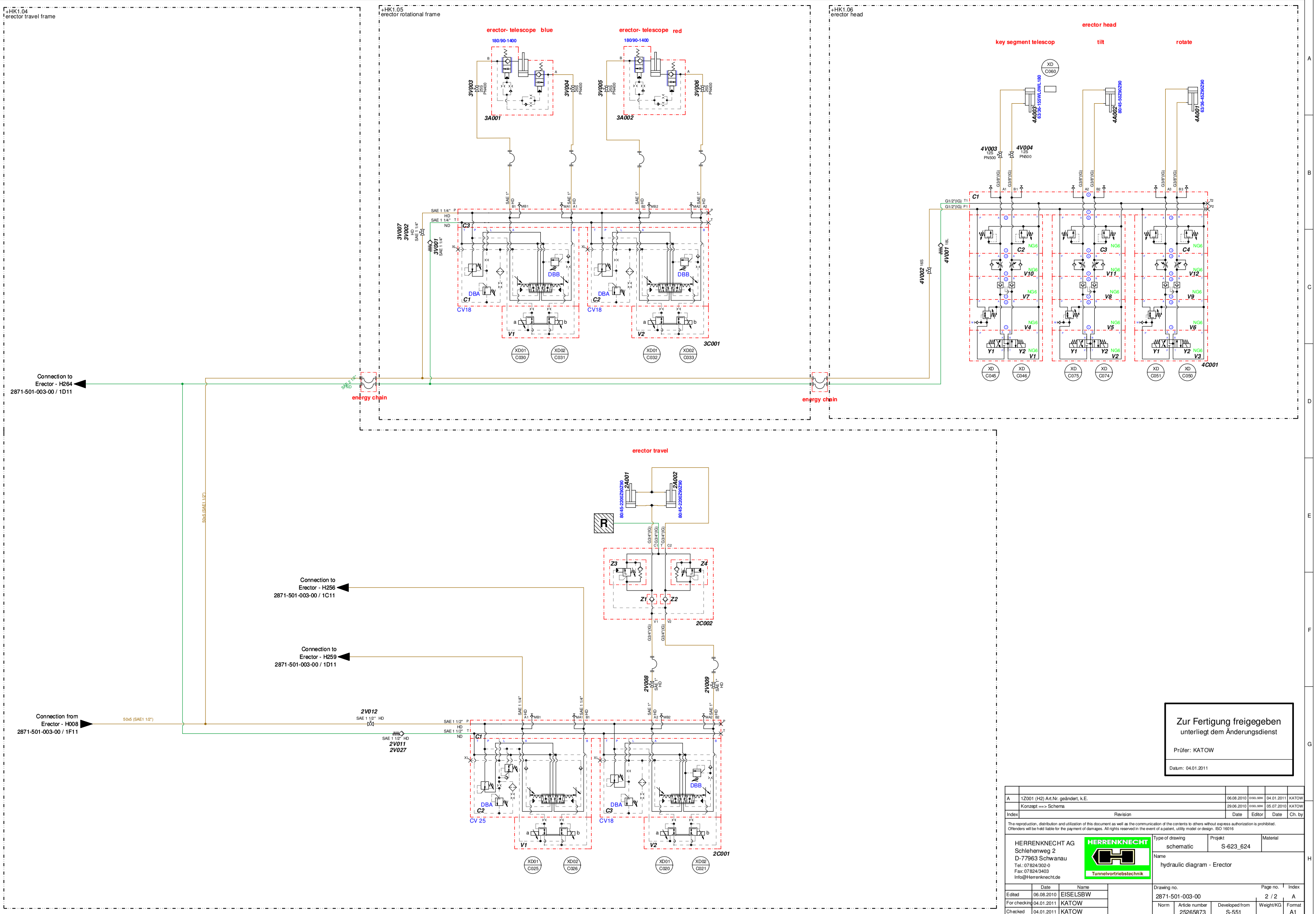

Zur Fertigung freigegeben
unterliegt dem Änderungsdienst

Prüfer: KATOW

Datum: 04.01.2011

Index	Revision	Date	Editor	Date	Ch. by
A	1Z001 (H2) Art.Nr. geändert, k.E.	06.08.2010	EISELSBW	04.01.2011	KATOW
	Konzept ==> Schema	29.06.2010	EISELSBW	05.07.2010	KATOW

The reproduction, distribution and utilization of this document as well as the communication of the contents to others without express authorization is prohibited. Offenders will be held liable for the payment of damages. All rights reserved in the event of a patent, utility model or design. ISO 16016

HERRENKNECHT AG
Schlehenweg 2
D-77963 Schwanau
Tel.: 07824/302-0
Fax: 07824/3403
Info@Herrenknecht.de

HERRENKNECHT
Tunnelvortriebstechnik

Type of drawing	Projekt	Material
schematic	S-623_624	

Name
hydraulic diagram - Erector

	Date	Name
Edited	06.08.2010	EISELSBW
For checking	04.01.2011	KATOW
Checked	04.01.2011	KATOW

Drawing no.	Page no.	Index
2871-501-003-00	2 / 2	A

Norm	Article number	Developed from	Weight/KG	Format
	25265873	S-551		A1

+HK1.01
shield

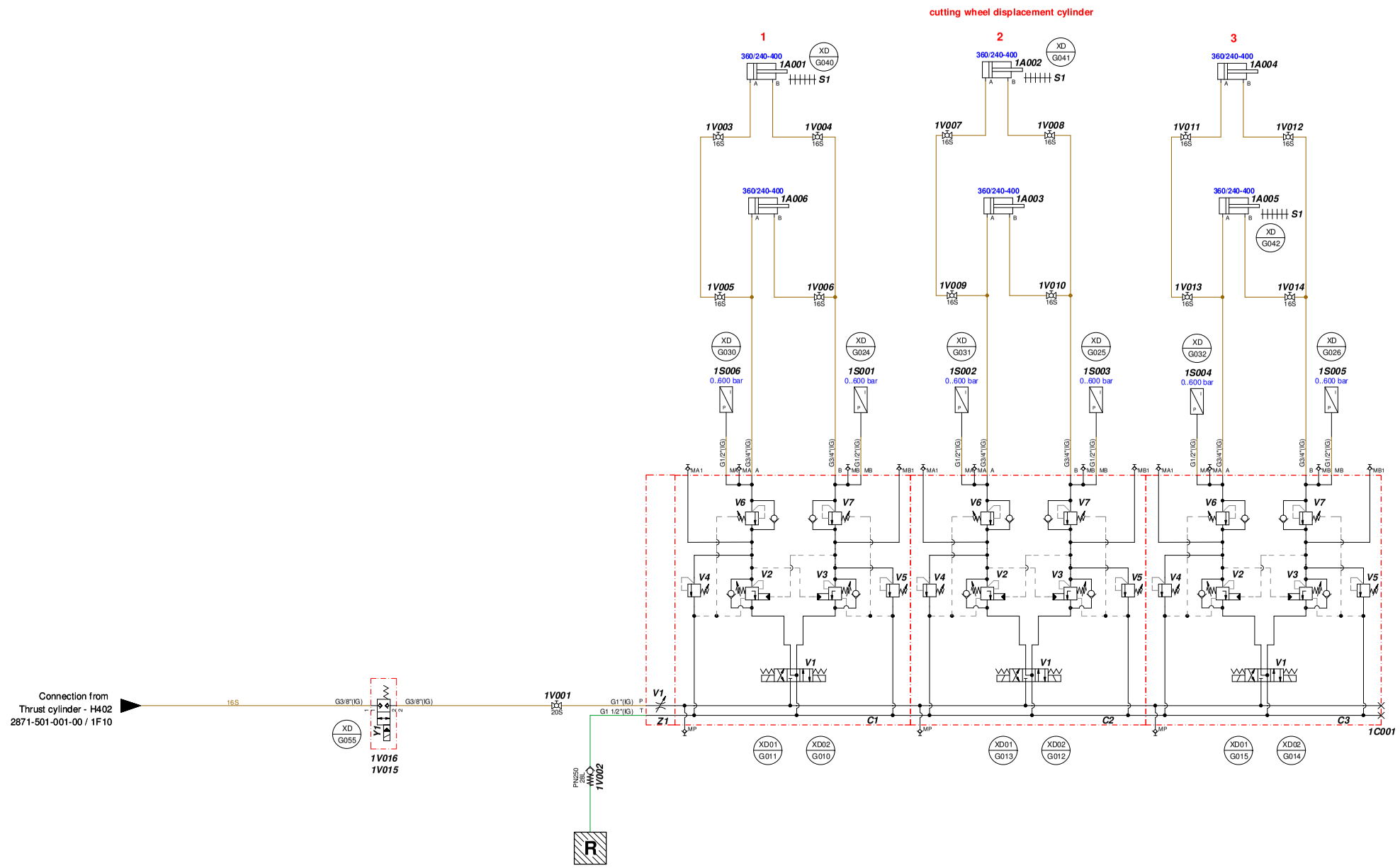

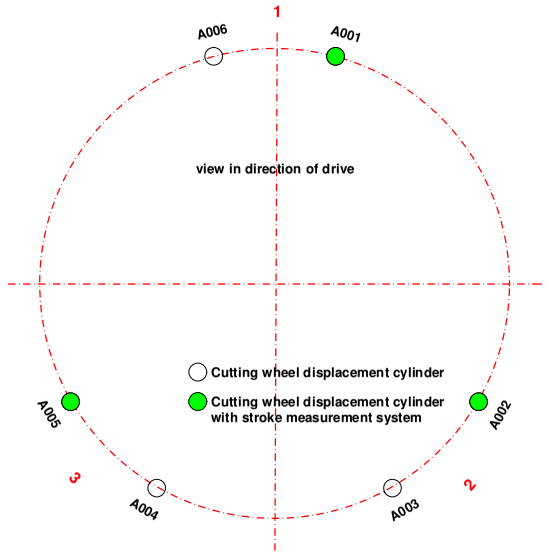

Zur Fertigung freigegeben
unterliegt dem Änderungsdienst

Prüfer: KATOW

Datum: 04.01.2011

Index	Revision	Date	Editor	Date	Ch. by
A	V015, V016, (E4) neu hinzu, 1V001, 1V002 (E5) Art.Nr. geändert	05.10.2010	EISELSBW	04.01.2011	KATOW
	Konzept ==> Schema	29.06.2010	EISELSBW	05.07.2010	KATOW

The reproduction, distribution and utilization of this document as well as the communication of the contents to others without express authorization is prohibited.
Offenders will be held liable for the payment of damages. All rights reserved in the event of a patent, utility model or design. ISO 16016

HERRENKNECHT AG
Schlehenweg 2
D-77963 Schwanau
Tel.: 07824/302-0
Fax: 07824/3403
Info@Herrenknecht.de

HERRENKNECHT
Tunnelvortriebstechnik

Type of drawing	Projekt	Material
schematic	S-623_624	

Name
hydraulic diagram - Shield equipments

	Date	Name
Edited	05.10.2010	EISELSBW
For checking	04.01.2011	KATOW
Checked	04.01.2011	KATOW

Drawing no.	Page no.	Index
2871-501-004-00	1 / 1	A

Norm	Article number	Developed from	Weight/KG	Format
	25265874	S-551		A1

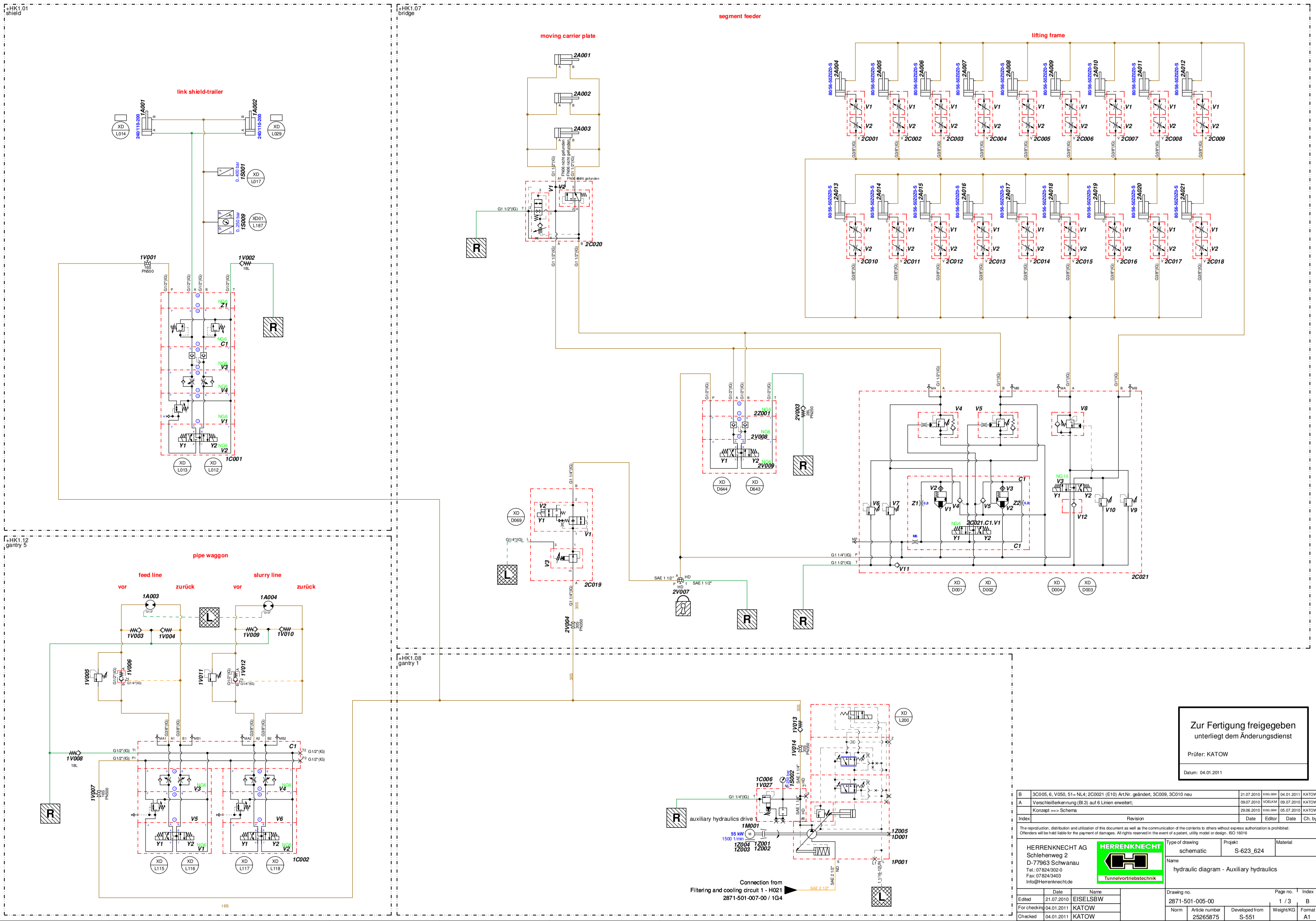

Zur Fertigung freigegeben
unterliegt dem Änderungsdienst

Prüfer: KATOW

Datum: 04.01.2011

Index	Revision	Date	Editor	Date	Ch. by
B	3C005, 6, V050, 51= NL4; 2C0021 (E10) Art.Nr. geändert, 3C009, 3C010 neu	21.07.2010	EISELSBW	04.01.2011	KATOW
A	Verschleißerkennung (Bl.3) auf 6 Linien erweitert;	09.07.2010	VOELKM	09.07.2010	KATOW
	Konzept ==> Schema	29.06.2010	EISELSBW	05.07.2010	KATOW

The reproduction, distribution and utilization of this document as well as the communication of the contents to others without express authorization is prohibited. Offenders will be held liable for the payment of damages. All rights reserved in the event of a patent, utility model or design. ISO 16016

HERRENKNECHT AG
Schlehenweg 2
D-77963 Schwanau
Tel.: 07824/302-0
Fax: 07824/3403
Info@Herrenknecht.de

HERRENKNECHT
Tunnelvortriebstechnik

	Date	Name
Edited	21.07.2010	EISELSBW
For checking	04.01.2011	KATOW
Checked	04.01.2011	KATOW

Type of drawing	Projekt	Material
schematic	S-623_624	

Name
hydraulic diagram - Auxiliary hydraulics

Drawing no.	Page no.	Index
2871-501-005-00	1 / 3	B

Norm	Article number	Developed from	Weight/KG	Format
	25265875	S-551		A1

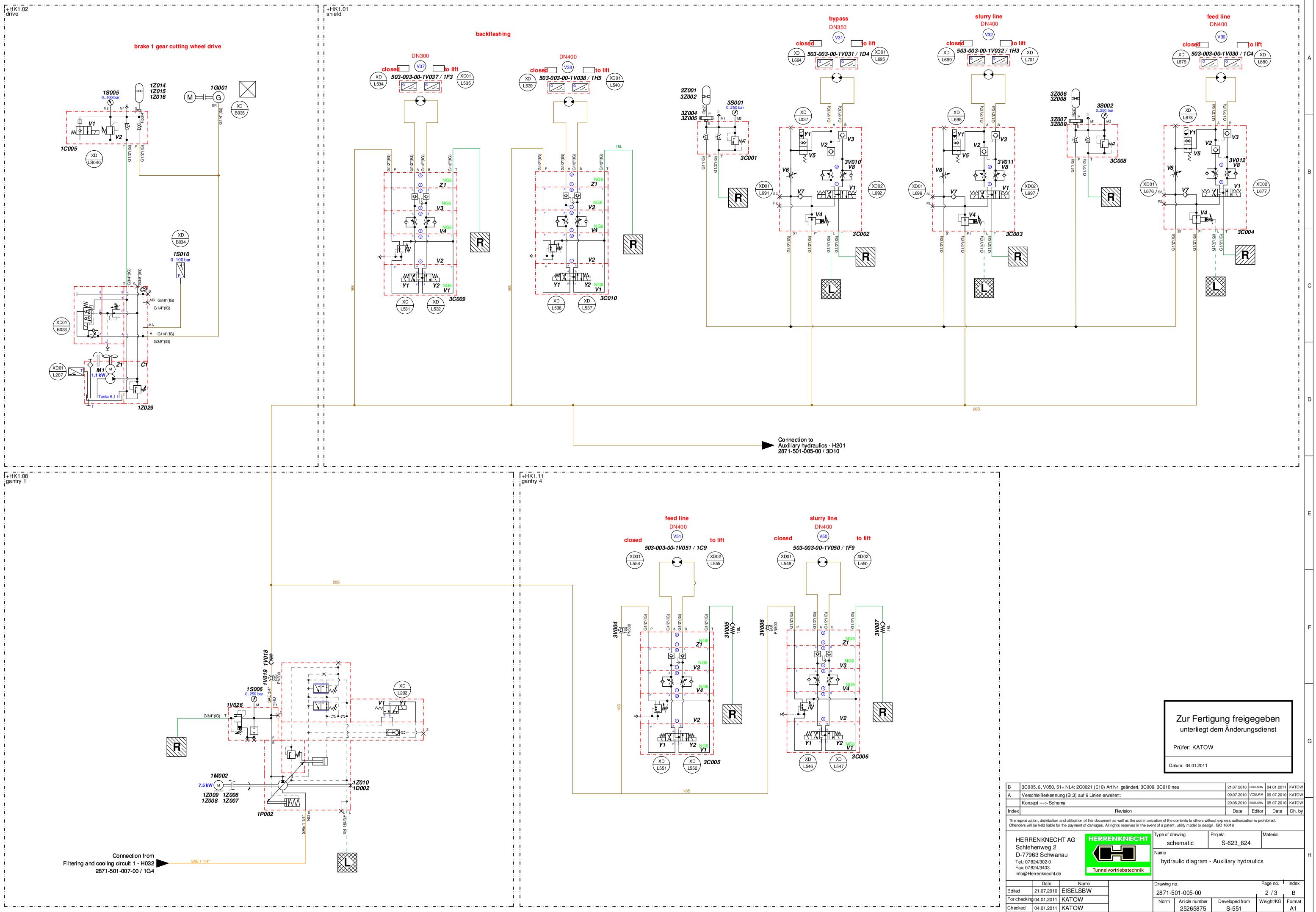

Zur Fertigung freigegeben
unterliegt dem Änderungsdienst

Prüfer: KATOW

Datum: 04.01.2011

Index	Revision	Date	Editor	Date	Ch. by
B	3C005, 6, V050, 51= NL4; 2C0021 (E10) Art.Nr. geändert, 3C009, 3C010 neu	21.07.2010	EISELSBW	04.01.2011	KATOW
A	Verschleißerkennung (Bl.3) auf 6 Linien erweitert;	09.07.2010	VOELKLM	09.07.2010	KATOW
	Konzept ==> Schema	29.06.2010	EISELSBW	05.07.2010	KATOW

The reproduction, distribution and utilization of this document as well as the communication of the contents to others without express authorization is prohibited.
Offenders will be held liable for the payment of damages. All rights reserved in the event of a patent, utility model or design. ISO 16016

HERRENKNECHT AG
Schlehenweg 2
D-77963 Schwanau
Tel.: 07824/302-0
Fax: 07824/3403
Info@Herrenknecht.de

HERRENKNECHT
Tunnelvortriebstechnik

Type of drawing: schematic
Projekt: S-623_624
Material:
Name: hydraulic diagram - Auxiliary hydraulics

	Date	Name
Edited	21.07.2010	EISELSBW
For checking	04.01.2011	KATOW
Checked	04.01.2011	KATOW

Drawing no.	Page no.	Index
2871-501-005-00	2 / 3	B

Norm	Article number	Developed from	Weight/KG	Format
	25265875	S-551		A1

+HK1.102
Cutting wheel

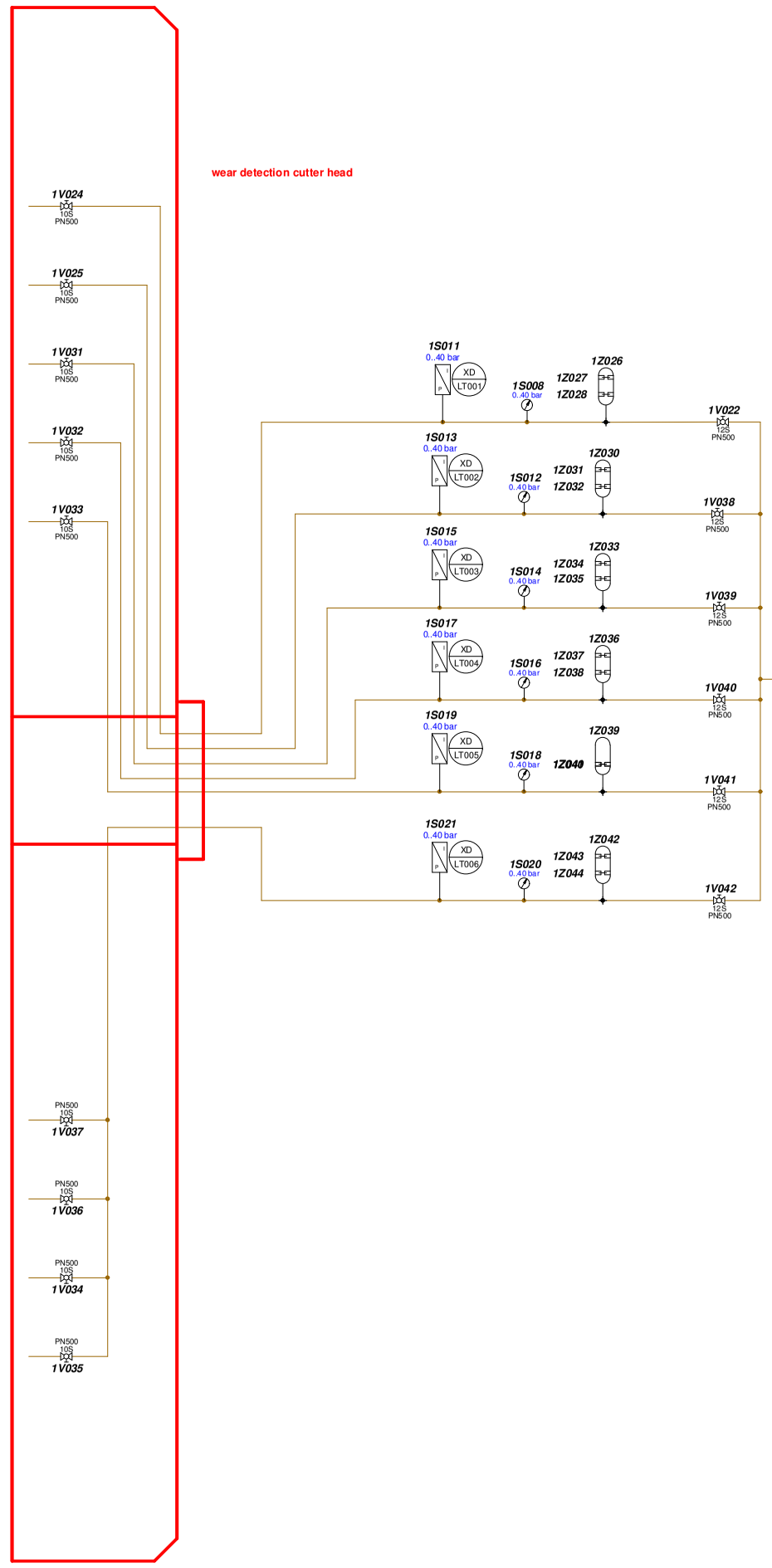

+HK1.01
shield

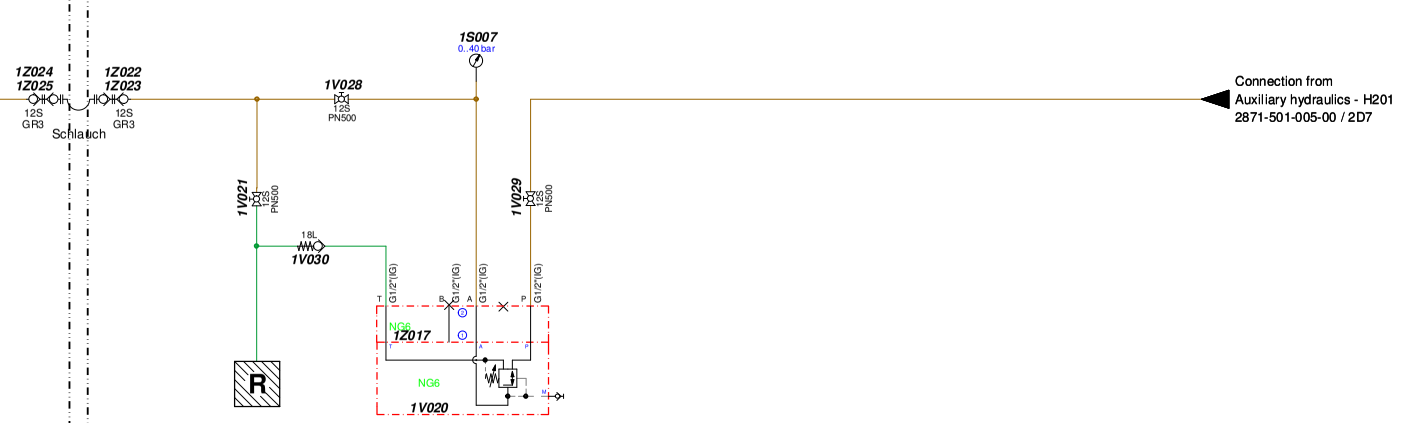

Zur Fertigung freigegeben
unterliegt dem Änderungsdienst

Prüfer: KATOW

Datum: 04.01.2011

Index	Revision	Date	Editor	Date	Ch. by
B	3C005, 6, V050, 51= NL4; 2C0021 (E10) Art.Nr. geändert, 3C009, 3C010 neu	21.07.2010	EISELSBW	04.01.2011	KATOW
A	Verschleißerkennung (Bl.3) auf 6 Linien erweitert;	09.07.2010	VOELKM	09.07.2010	KATOW
	Konzept ==> Schema	29.06.2010	EISELSBW	05.07.2010	KATOW

The reproduction, distribution and utilization of this document as well as the communication of the contents to others without express authorization is prohibited. Offenders will be held liable for the payment of damages. All rights reserved in the event of a patent, utility model or design. ISO 16016

HERRENKNECHT AG
Schlehenweg 2
D-77963 Schwanau
Tel.: 07824/302-0
Fax: 07824/3403
Info@Herrenknecht.de

HERRENKNECHT
Tunnelvortriebstechnik

	Date	Name
Edited	21.07.2010	EISELSBW
For checking	04.01.2011	KATOW
Checked	04.01.2011	KATOW

Type of drawing: schematic
Projekt: S-623_624
Material:

Name: hydraulic diagram - Auxiliary hydraulics

Drawing no.: 2871-501-005-00
Page no.: 3 / 3
Index: B

Norm	Article number	Developed from	Weight/KG	Format
	25265875	S-551		A1

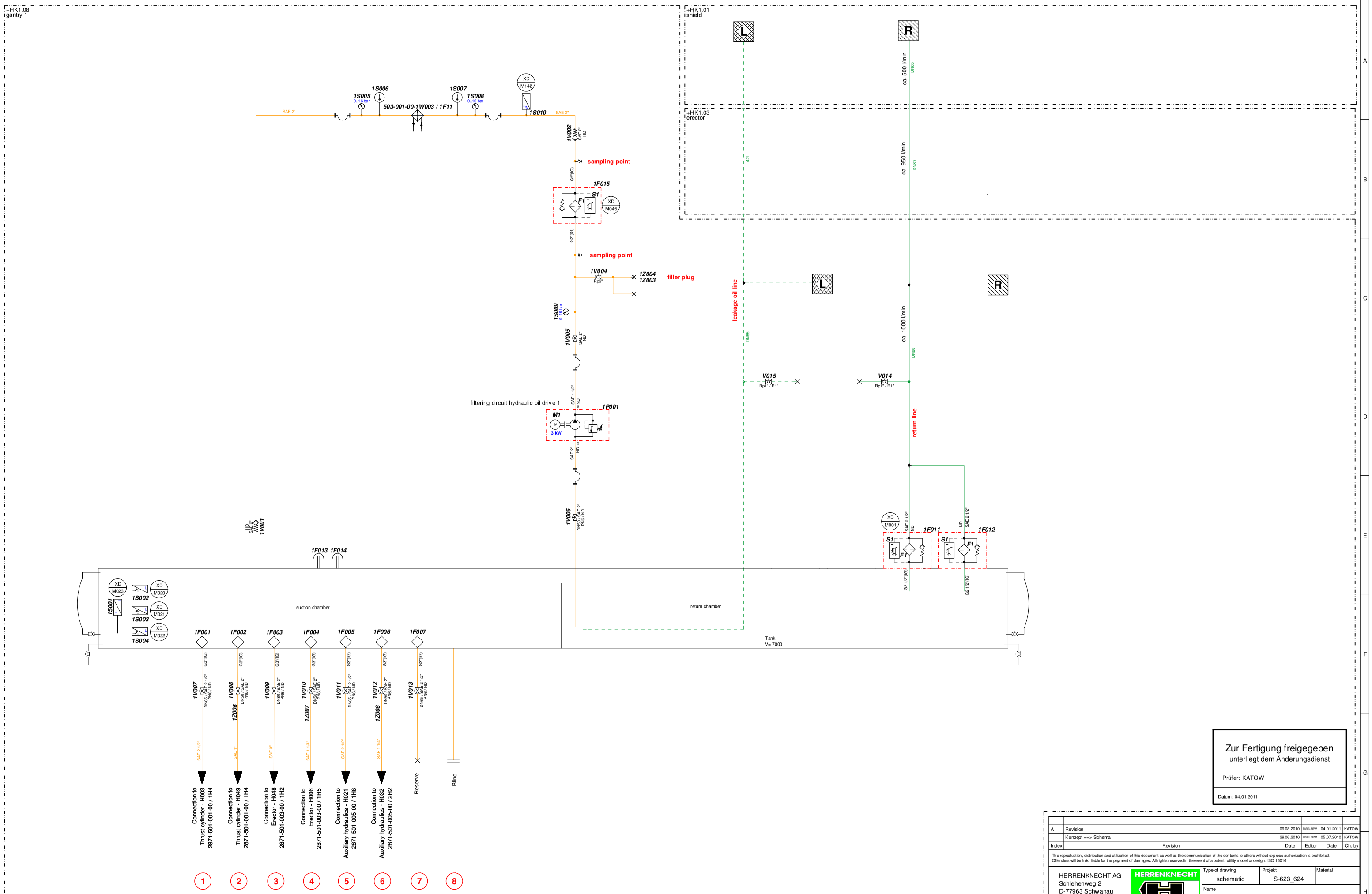

Zur Fertigung freigegeben
unterliegt dem Änderungsdienst

Prüfer: KATOW

Datum: 04.01.2011

Index	Revision	Date	Editor	Date	Ch. by
A	Revision	09.08.2010	EISELSBW	04.01.2011	KATOW
	Konzept ==> Schema	29.06.2010	EISELSBW	05.07.2010	KATOW

The reproduction, distribution and utilization of this document as well as the communication of the contents to others without express authorization is prohibited. Offenders will be held liable for the payment of damages. All rights reserved in the event of a patent, utility model or design. ISO 16016

HERRENKNECHT AG
Schlehenweg 2
D-77963 Schwanau
Tel.: 07824/302-0
Fax: 07824/3403
Info@Herrenknecht.de

HERRENKNECHT
Tunnelvortriebstechnik

	Date	Name
Edited	09.08.2010	EISELSBW
For checking	04.01.2011	KATOW
Checked	04.01.2011	KATOW

Type of drawing: schematic
Projekt: S-623_624
Material:
Name: hydraulic diagram - Filtering and cooling circuit 1

Drawing no.	Page no.	Index
2871-501-007-00	1 / 1	A

Norm	Article number	Developed from	Weight/KG	Format
	25265876	S-551		A1

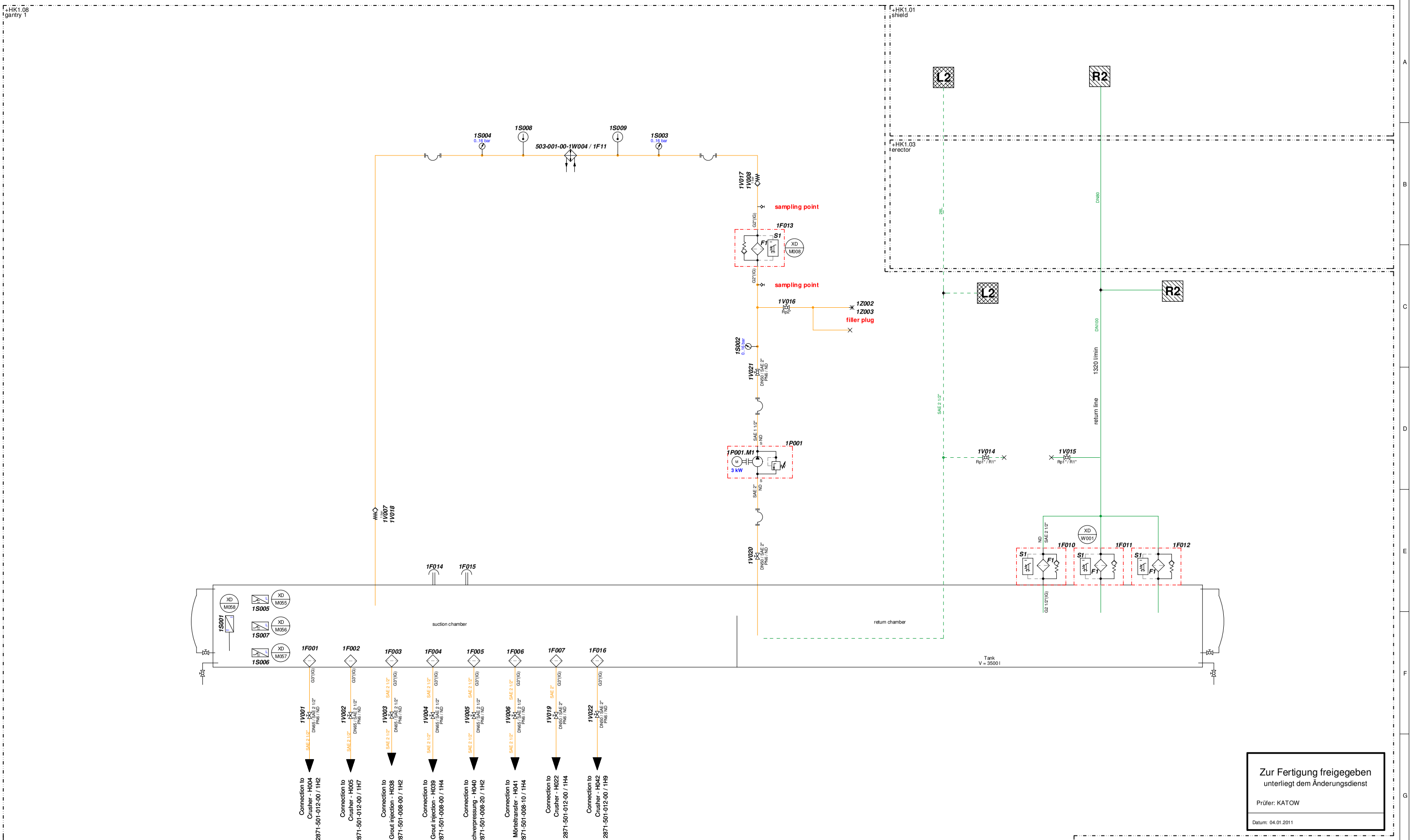

Zur Fertigung freigegeben
unterliegt dem Änderungsdienst

Prüfer: KATOW

Datum: 04.01.2011

Index	Revision	Date	Editor	Date	Ch. by
A	1F010 (E9) neu, k.E.	22.09.2010	EISELSBW	04.01.2011	KATOW
	Konzept ==> Schema	29.06.2010	EISELSBW	05.07.2010	KATOW

The reproduction, distribution and utilization of this document as well as the communication of the contents to others without express authorization is prohibited. Offenders will be held liable for the payment of damages. All rights reserved in the event of a patent, utility model or design. ISO 16016

HERRENKNECHT AG
Schlehenweg 2
D-77963 Schwanau
Tel.: 07824/302-0
Fax: 07824/3403
Info@Herrenknecht.de

HERRENKNECHT
Tunnelvortriebstechnik

	Date	Name
Edited	22.09.2010	EISELSBW
For checking	04.01.2011	KATOW
Checked	04.01.2011	KATOW

Type of drawing: schematic
Projekt: S-623_624
Material:

Name: hydraulic diagram - Filtering and cooling circuit 2

Drawing no.: 2871-501-007-10
Page no.: 1 / 1
Index: A

Norm	Article number	Developed from	Weight/KG	Format
	25265877	S-551		A1

+HK1.08
gantry 1

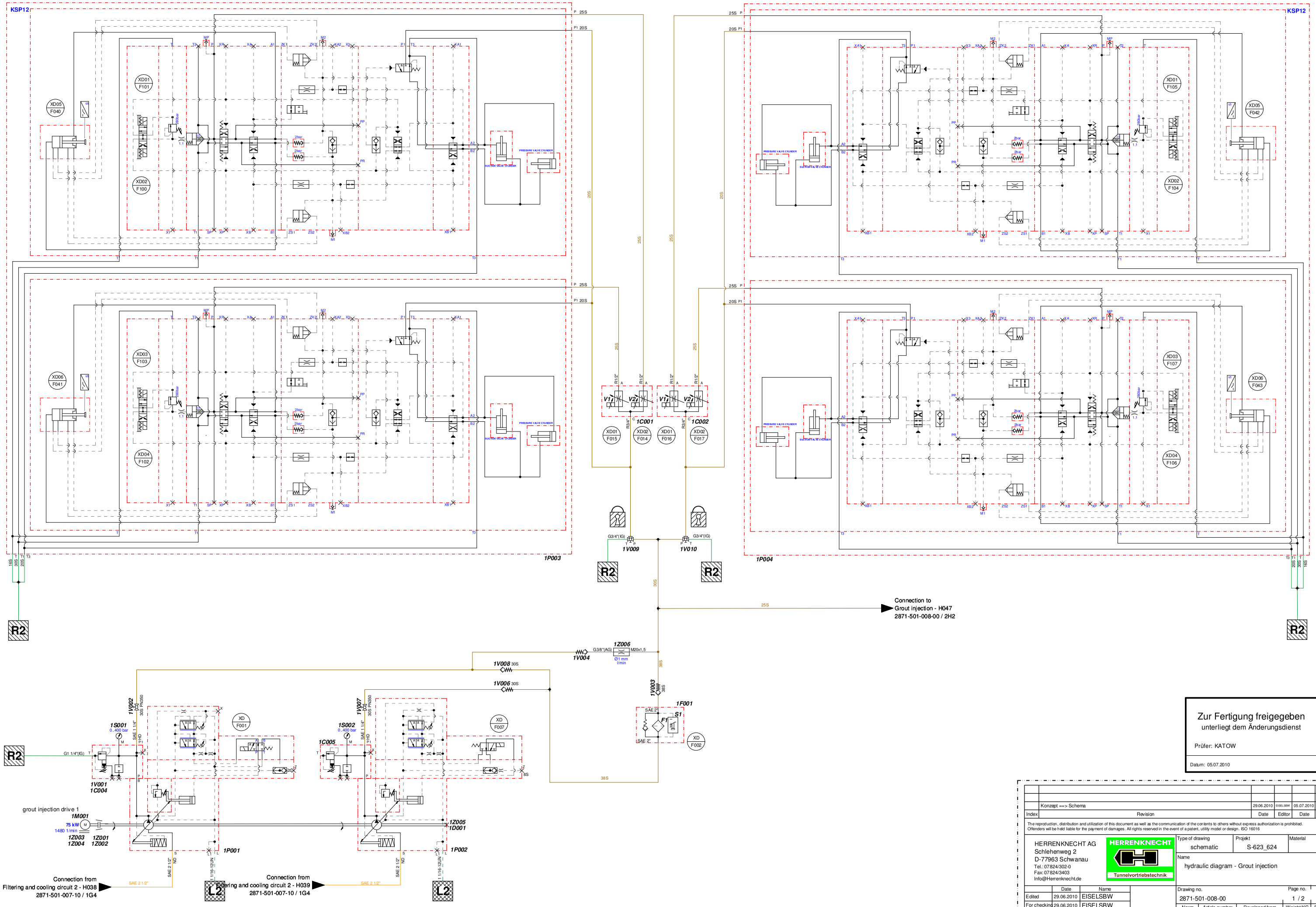

Zur Fertigung freigegeben
unterliegt dem Änderungsdienst

Prüfer: KATOW

Datum: 05.07.2010

Index	Revision	Date	Editor	Date	Ch. by
	Konzept ==> Schema	29.06.2010	EISELSBW	05.07.2010	KATOW

The reproduction, distribution and utilization of this document as well as the communication of the contents to others without express authorization is prohibited. Offenders will be held liable for the payment of damages. All rights reserved in the event of a patent, utility model or design. ISO 16016

HERRENKNECHT AG
Schlehenweg 2
D-77963 Schwanau
Tel.: 07824/302-0
Fax: 07824/3403
Info@Herrenknecht.de

HERRENKNECHT
Tunnelvortriebstechnik

	Date	Name
Edited	29.06.2010	EISELSBW
For checking	29.06.2010	EISELSBW
Checked	05.07.2010	KATOW

Type of drawing	Projekt	Material
schematic	S-623_624	

Name
hydraulic diagram - Grout injection

Drawing no.	Page no.	Index
2871-501-008-00	1 / 2	

Norm	Article number	Developed from	Weight/KG	Format
	25265878	S-551		A1

+HK1.08
gantry 1

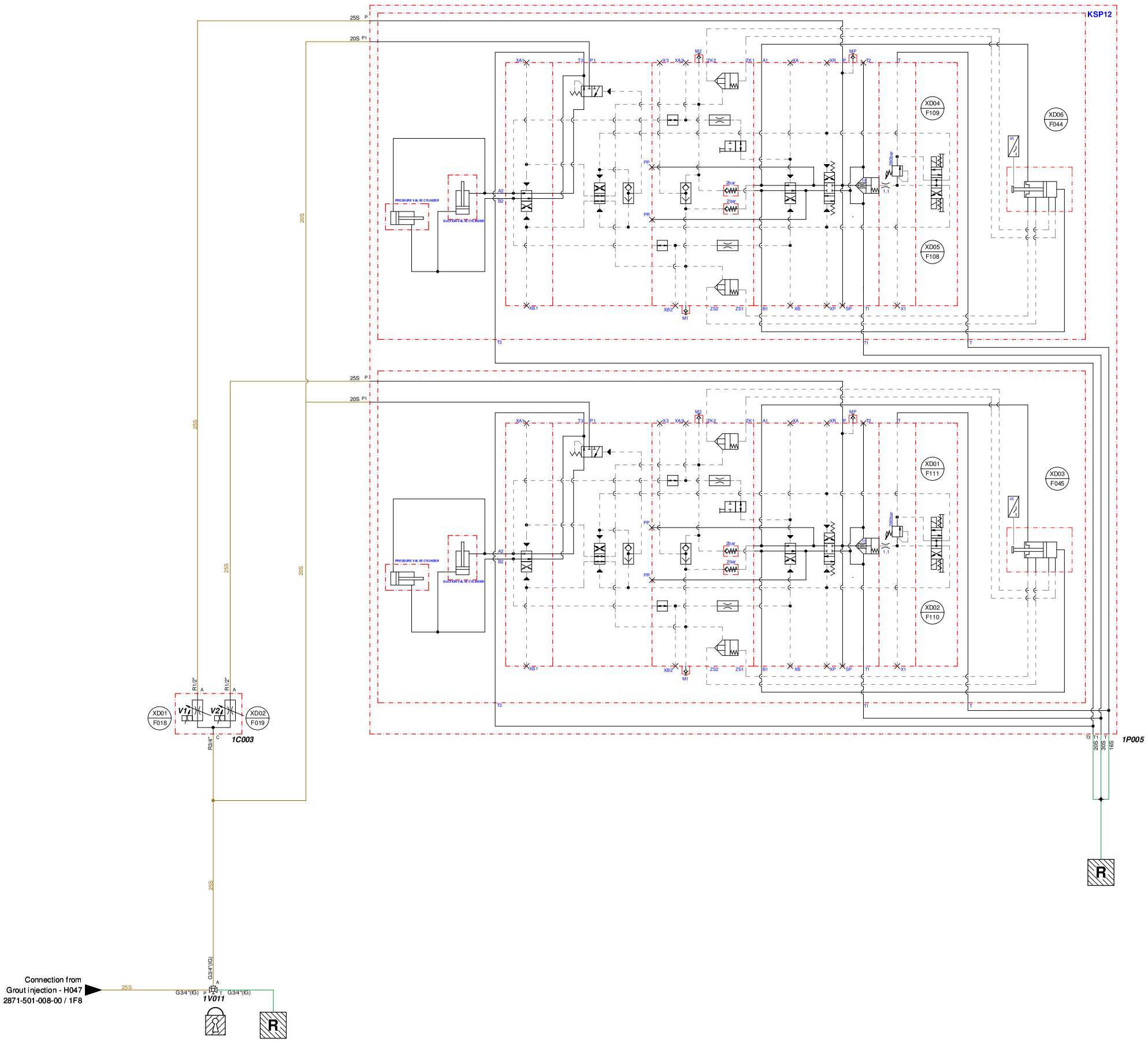

Zur Fertigung freigegeben
unterliegt dem Änderungsdienst

Prüfer: KATOW

Datum: 05.07.2010

Index	Revision	Date	Editor	Date	Ch. by
	Konzept ==> Schema	29.06.2010	EISELSBW	05.07.2010	KATOW

The reproduction, distribution and utilization of this document as well as the communication of the contents to others without express authorization is prohibited.
Offenders will be held liable for the payment of damages. All rights reserved in the event of a patent, utility model or design. ISO 16016

HERRENKNECHT AG
Schlehenweg 2
D-77963 Schwanau
Tel.: 07824/302-0
Fax: 07824/3403
Info@Herrenknecht.de

HERRENKNECHT
Tunnelvortriebstechnik

	Date	Name
Edited	29.06.2010	EISELSBW
For checking	29.06.2010	EISELSBW
Checked	05.07.2010	KATOW

Type of drawing: schematic
Projekt: S-623_624
Material:
Name: hydraulic diagram - Grout injection

Drawing no.: 2871-501-008-00
Page no.: 2 / 2
Index:

Norm	Article number	Developed from	Weight/KG	Format
	25265878	S-551		A1

+HK1.11
gantry 4

grout transfer pump

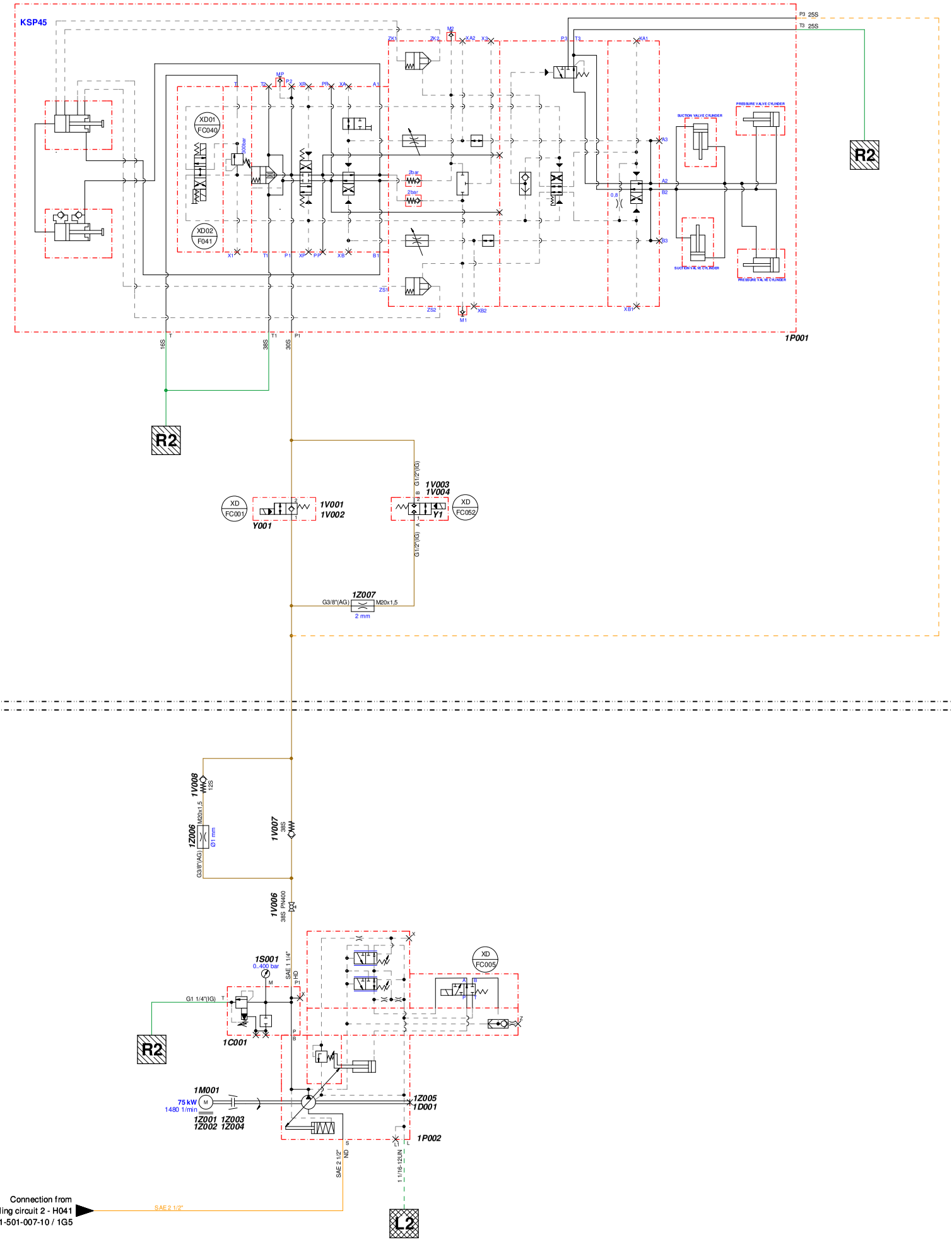

+HK1.08
gantry 1

Zur Fertigung freigegeben
unterliegt dem Änderungsdienst

Prüfer: KATOW

Datum: 05.07.2010

Index	Revision	Date	Editor	Date	Ch. by
	Konzept ==> Schema	29.06.2010	EISELSBW	05.07.2010	KATOW

The reproduction, distribution and utilization of this document as well as the communication of the contents to others without express authorization is prohibited.
Offenders will be held liable for the payment of damages. All rights reserved in the event of a patent, utility model or design. ISO 16016

HERRENKNECHT AG
Schlehenweg 2
D-77963 Schwanau
Tel.: 07824/302-0
Fax: 07824/3403
Info@Herrenknecht.de

HERRENKNECHT
Tunnelvortriebstechnik

Type of drawing	Projekt	Material
schematic	S-623_624	

Name
hydraulic diagram - Mörteltransfer

	Date	Name
Edited	29.06.2010	EISELSBW
For checking	29.06.2010	EISELSBW
Checked	05.07.2010	KATOW

Drawing no.	Page no.	Index
2871-501-008-10	1 / 1	

Norm	Article number	Developed from	Weight/KG	Format
	25265879	S-551		A1

+HK1.08
gantry 1

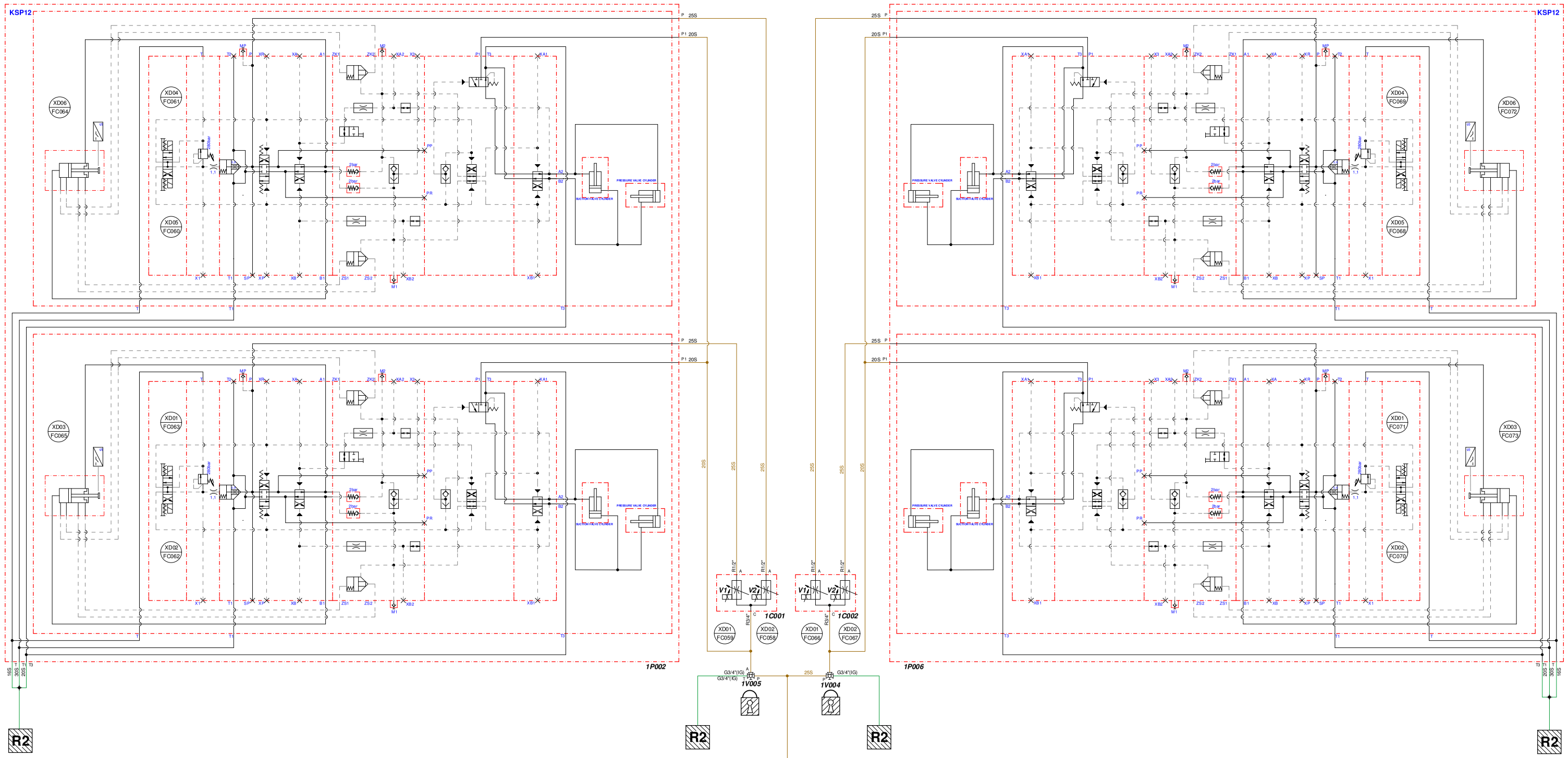

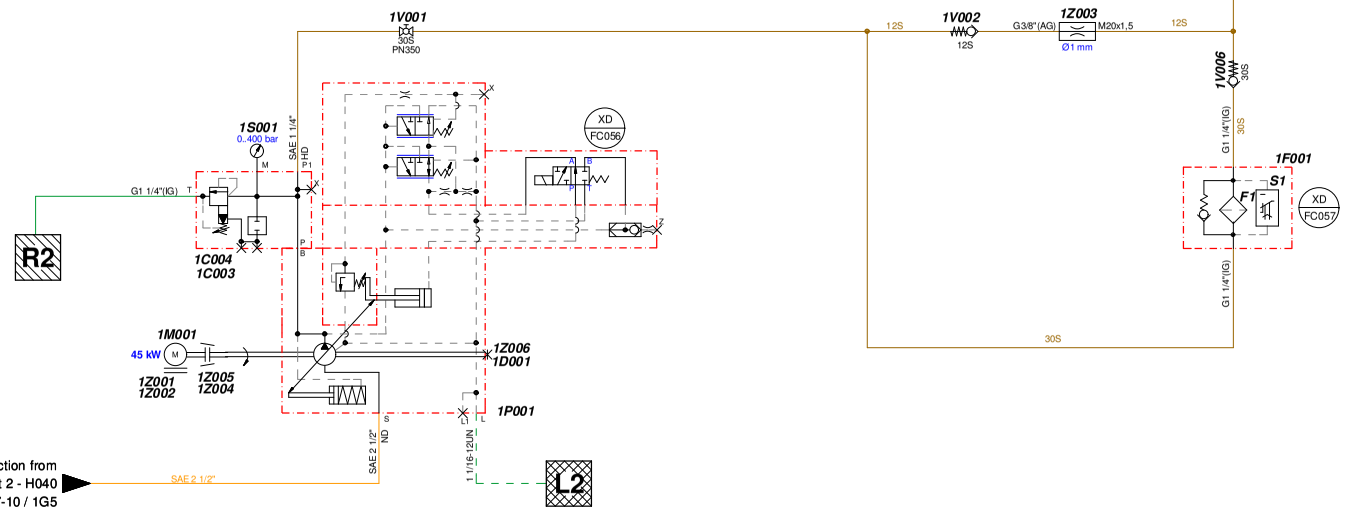

Zur Fertigung freigegeben
unterliegt dem Änderungsdienst

Prüfer: KATOW

Datum: 05.07.2010

Index	Revision	Date	Editor	Date	Ch. by
	Konzept ==> Schema	29.06.2010	EISELSBW	05.07.2010	KATOW

The reproduction, distribution and utilization of this document as well as the communication of the contents to others without express authorization is prohibited.
Offenders will be held liable for the payment of damages. All rights reserved in the event of a patent, utility model or design. ISO 16016

HERRENKNECHT AG
Schlehenweg 2
D-77963 Schwanau
Tel.: 07824/302-0
Fax: 07824/3403
Info@Herrenknecht.de

HERRENKNECHT
Tunnelvortriebstechnik

Type of drawing	Projekt	Material
schematic	S-623_624	

Name
hydraulic diagram - Mörtelnachverpressung

	Date	Name
Edited	29.06.2010	EISELSBW
For checking	29.06.2010	EISELSBW
Checked	05.07.2010	KATOW

Drawing no.	Page no.	Index
2871-501-008-20	1 / 1	

Norm	Article number	Developed from	Weight/KG	Format
	25265880	S-551		A1

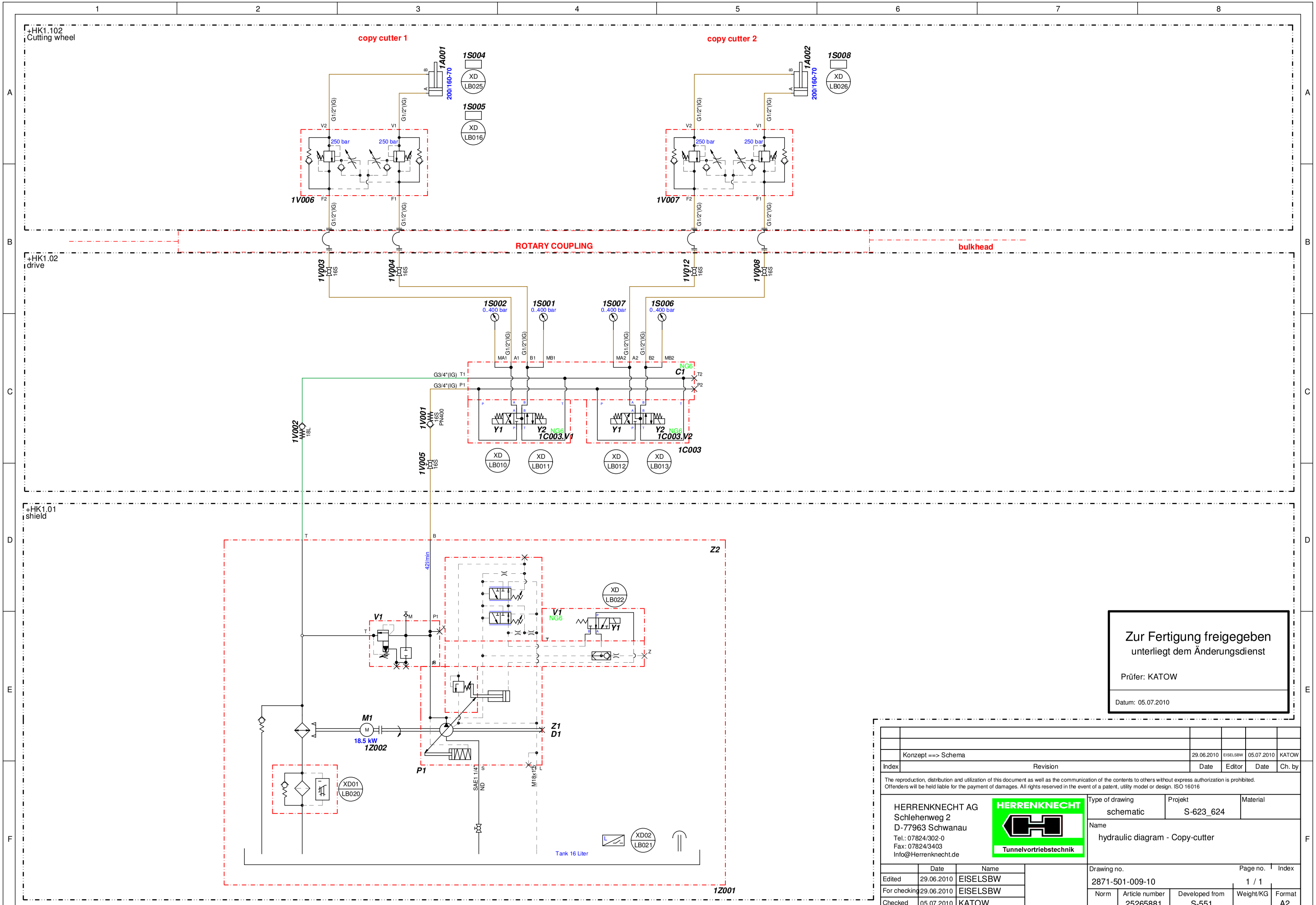

Zur Fertigung freigegeben
unterliegt dem Änderungsdienst

Prüfer: KATOW

Datum: 05.07.2010

Index	Revision	Date	Editor	Date	Ch. by
	Konzept ==> Schema	29.06.2010	EISELSBW	05.07.2010	KATOW

The reproduction, distribution and utilization of this document as well as the communication of the contents to others without express authorization is prohibited. Offenders will be held liable for the payment of damages. All rights reserved in the event of a patent, utility model or design. ISO 16016

HERRENKNECHT AG
Schlehenweg 2
D-77963 Schwanau
Tel.: 07824/302-0
Fax: 07824/3403
Info@Herrenknecht.de

HERRENKNECHT
Tunnelvortriebstechnik

	Date	Name
Edited	29.06.2010	EISELSBW
For checking	29.06.2010	EISELSBW
Checked	05.07.2010	KATOW

Type of drawing	Projekt	Material
schematic	S-623_624	

Name
hydraulic diagram - Copy-cutter

Drawing no.	Page no.	Index
2871-501-009-10	1 / 1	

Norm	Article number	Developed from	Weight/KG	Format
	25265881	S-551		A2

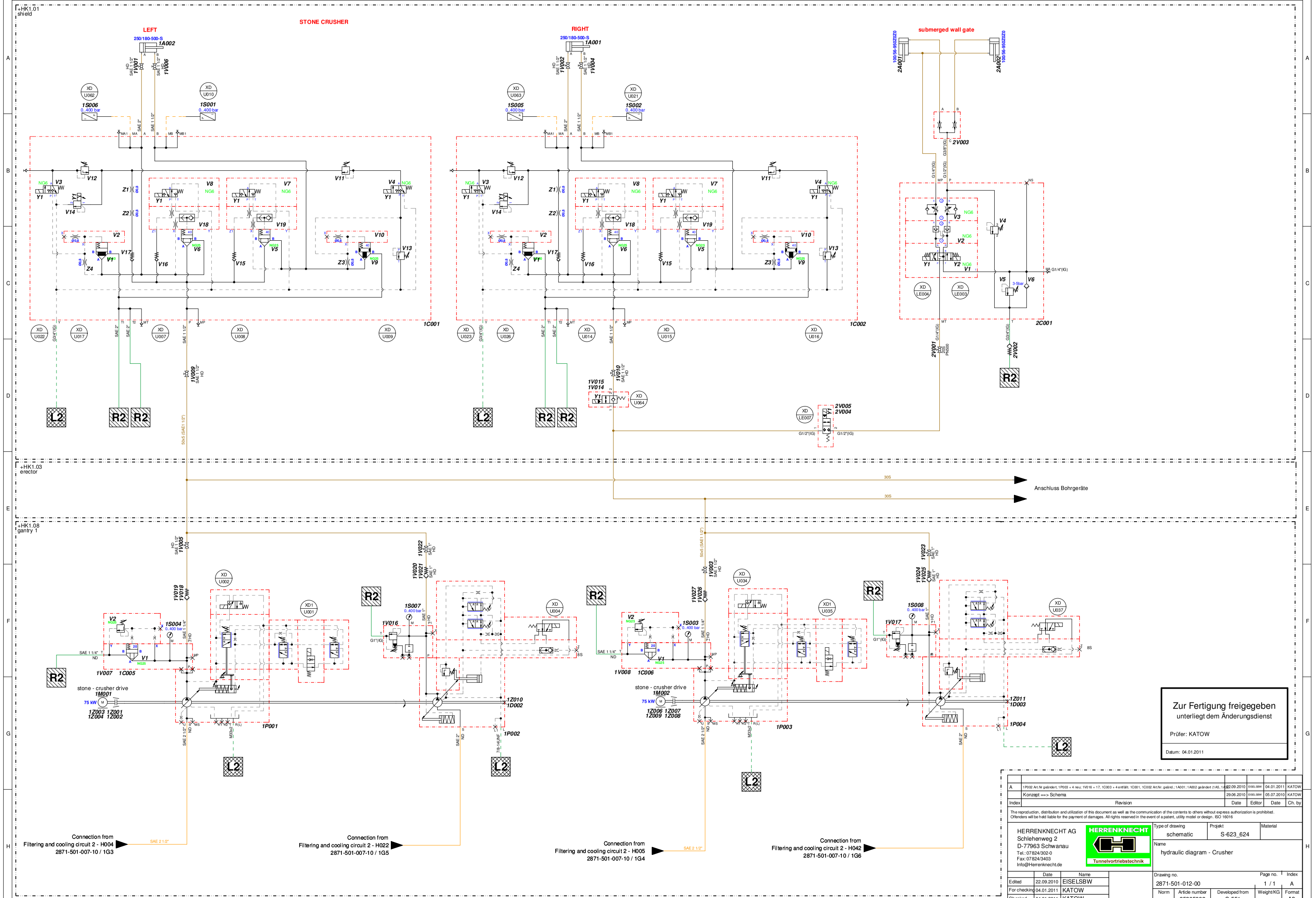
+HK1.01
shield
STONE CRUSHER
LEFT
RIGHT
submerged wall gate
250/180-500-S
1A002
1A001
2A001
2A002
1S006
1S001
1S005
1S002
0..400 bar
1C001
1C002
2C001
2V003
2V001
2V002
R2
L2
+HK1.03
erector
30S
Anschluss Bohrgeräte
+HK1.08
gantry 1
stone - crusher drive
1M001
1M002
75 kW
1S004
1S007
1S003
1S008
1V007
1C005
1V008
1C006
1P001
1P002
1P003
1P004
Connection from
Filtering and cooling circuit 2 - H004
2871-501-007-10 / 1G3
Connection from
Filtering and cooling circuit 2 - H022
2871-501-007-10 / 1G5
Connection from
Filtering and cooling circuit 2 - H005
2871-501-007-10 / 1G4
Connection from
Filtering and cooling circuit 2 - H042
2871-501-007-10 / 1G6
Zur Fertigung freigegeben
unterliegt dem Änderungsdienst
Prüfer: KATOW
Datum: 04.01.2011
A | 1P002 Art.Nr geändert, 1P003 + 4 neu; 1V016 + 17, 1C003 + 4 entfällt, 1C001, 1C002 ArtNr. geänd.; 1A001; 1A002 geändert (1A5, 1A6) | 22.09.2010 | EISELSBW | 04.01.2011 | KATOW
Konzept ==> Schema | 29.06.2010 | EISELSBW | 05.07.2010 | KATOW
Index | Revision | Date | Editor | Date | Ch. by
The reproduction, distribution and utilization of this document as well as the communication of the contents to others without express authorization is prohibited.
Offenders will be held liable for the payment of damages. All rights reserved in the event of a patent, utility model or design. ISO 16016
HERRENKNECHT AG
Schlehenweg 2
D-77963 Schwanau
Tel.: 07824/302-0
Fax: 07824/3403
Info@Herrenknecht.de
HERRENKNECHT
Tunnelvortriebstechnik
Type of drawing: schematic
Projekt: S-623_624
Material
Name: hydraulic diagram - Crusher
Edited | 22.09.2010 | EISELSBW
For checking | 04.01.2011 | KATOW
Checked | 04.01.2011 | KATOW
Drawing no.: 2871-501-012-00
Page no.: 1 / 1
Index: A
Norm
Article number: 25265882
Developed from: S-551
Weight/KG
Format: A2

+HK1.40
segment crane

Segment crane

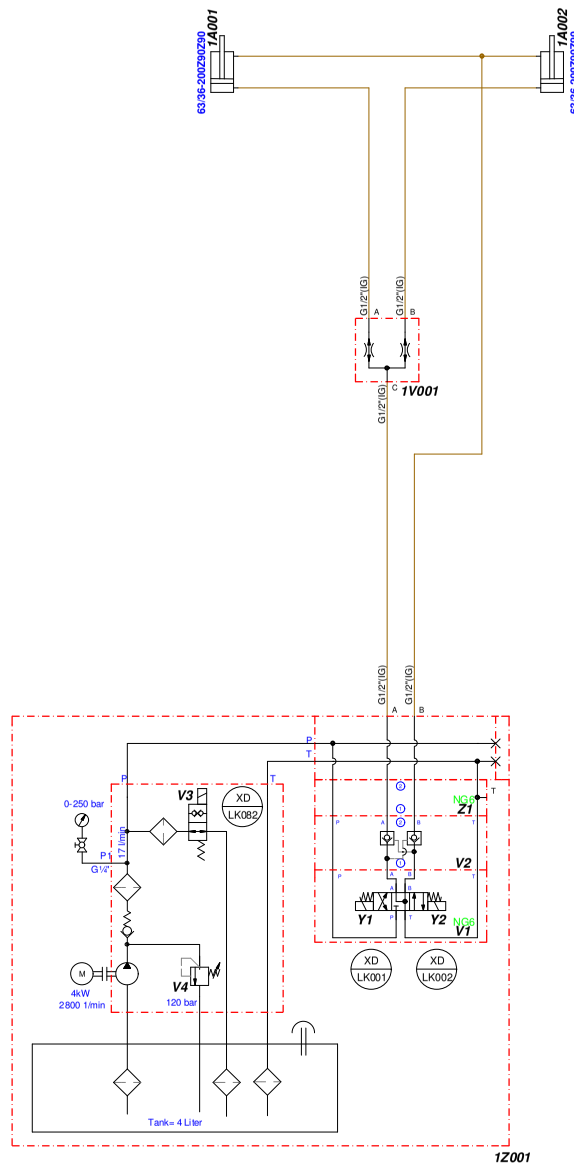

Zur Fertigung freigegeben
unterliegt dem Änderungsdienst

Prüfer: KATOW

Datum: 04.01.2011

Index	Revision	Date	Editor	Date	Ch. by
	Revision	04.01.2011	KATOW	04.01.2011	KATOW

The reproduction, distribution and utilization of this document as well as the communication of the contents to others without express authorization is prohibited.
Offenders will be held liable for the payment of damages. All rights reserved in the event of a patent, utility model or design. ISO 16016

HERRENKNECHT AG
Schlehenweg 2
D-77963 Schwanau
Tel.: 07824/302-0
Fax: 07824/3403
Info@Herrenknecht.de

HERRENKNECHT
Tunnelvortriebstechnik

Type of drawing	Projekt	Material
schematic	S-623_624	

Name
hydraulic diagram - Tübbingkran

	Date	Name
Edited	04.01.2011	KATOW
For checking	04.01.2011	KATOW
Checked	04.01.2011	KATOW

Drawing no.	Page no.	Index
2871-501-015-00	1 / 1	

Norm	Article number	Developed from	Weight/KG	Format
	25266459	S-551		A1

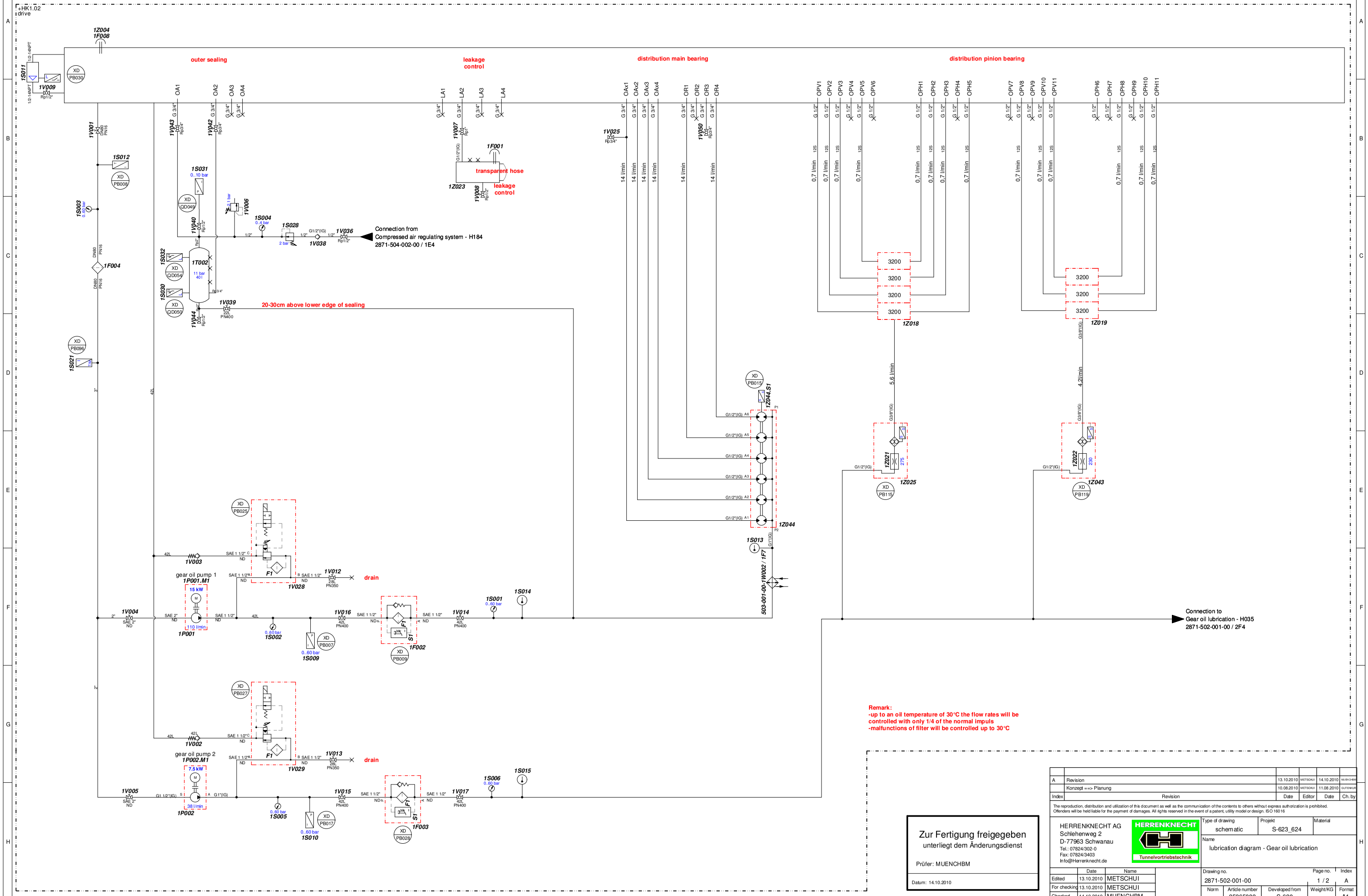

Zur Fertigung freigegeben
unterliegt dem Änderungsdienst

Prüfer: MUENCHBM

Datum: 14.10.2010

Index	Revision	Date	Editor	Date	Ch. by
A	Revision	13.10.2010	METSCHUI	14.10.2010	MUENCHBM
	Konzept ==> Planung	10.08.2010	METSCHUI	11.08.2010	GUTENKUN

The reproduction, distribution and utilization of this document as well as the communication of the contents to others without express authorization is prohibited. Offenders will be held liable for the payment of damages. All rights reserved in the event of a patent, utility model or design. ISO 16016

HERRENKNECHT AG
Schlehenweg 2
D-77963 Schwanau
Tel.: 07824/302-0
Fax: 07824/3403
Info@Herrenknecht.de

HERRENKNECHT
Tunnelvortriebstechnik

Type of drawing: schematic
Projekt: S-623_624
Material:
Name: lubrication diagram - Gear oil lubrication

	Date	Name
Edited	13.10.2010	METSCHUI
For checking	13.10.2010	METSCHUI
Checked	14.10.2010	MUENCHBM

Drawing no.: 2871-502-001-00
Page no.: 1 / 2
Index: A

Norm	Article number	Developed from	Weight/KG	Format
	25265883	S-620		A1

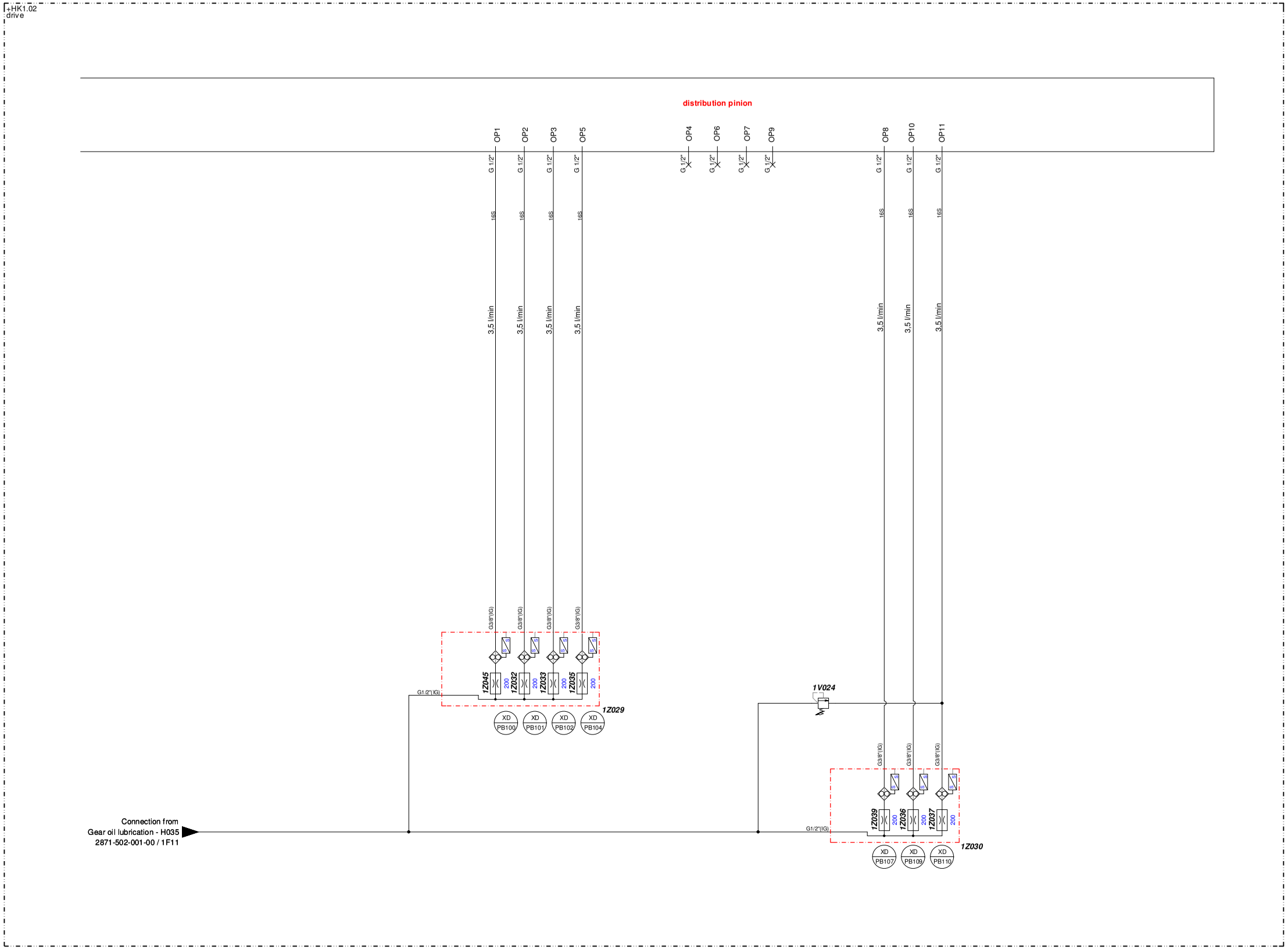

Zur Fertigung freigegeben
unterliegt dem Änderungsdienst

Prüfer: MUENCHBM

Datum: 14.10.2010

Index	Revision	Date	Editor	Date	Ch. by
A	Revision	13.10.2010	METSCHUI	14.10.2010	MUENCHBM
	Konzept ==> Planung	10.08.2010	METSCHUI	11.08.2010	GUTENAUR

The reproduction, distribution and utilization of this document as well as the communication of the contents to others without express authorization is prohibited.
Offenders will be held liable for the payment of damages. All rights reserved in the event of a patent, utility model or design. ISO 16016

HERRENKNECHT AG
Schlehenweg 2
D-77963 Schwanau
Tel.: 07824/302-0
Fax: 07824/3403
Info@Herrenknecht.de

HERRENKNECHT
Tunnelvortriebstechnik

Type of drawing: schematic
Projekt: S-623_624
Material:
Name: lubrication diagram - Gear oil lubrication

	Date	Name
Edited	13.10.2010	METSCHUI
For checking	13.10.2010	METSCHUI
Checked	14.10.2010	MUENCHBM

Drawing no.	Page no.	Index
2871-502-001-00	2 / 2	A

Norm	Article number	Developed from	Weight/KG	Format
	25265883	S-620		A1

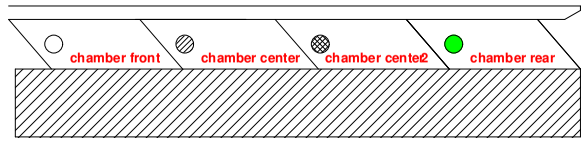

+HK1.01
shield

10 front	1V021	1S052 0..40 bar	XD PA081	1V057	
10 middle	1V017	1S051 0.40 bar	XD PA093	1V055	
10 middle 2	1V093	1S058 0.40 bar	XD PA279	1V094	
10 rear	1V006	1S050 0.40 bar	XD PA105	1V050	
9 front	1V022	1S035 0.40 bar	XD PA080	1V053	
9 middle	1V031	1S037 0.40 bar	XD PA092	1V061	
9 middle 2	1V095	1S059 0.40 bar	XD PA278	1V096	
9 rear	1V020	1S036 0.40 bar	XD PA104	1V054	
8 front	1V030	1S049 0.40 bar	XD PA079	1V058	
8 middle	1V025	1S048 0.40 bar	XD PA091	1V059	
8 middle 2	1V097	1S060 0.40 bar	XD PA277	1V098	
8 rear	1V028	1S047 0.40 bar	XD PA103	1V060	
7 front	1V019	1S032 0.40 bar	XD PA078	1V041	
7 middle	1V018	1S034 0..40 bar	XD PA090	1V036	
7 middle 2	1V100	1S061 0.40 bar	XD PA276	1V099	
7 rear	1V029	1S033 0.40 bar	XD PA102	1V042	
6 front	1V010	1S046 0.40 bar	XD PA077	1V040	
6 middle	1V024	1S045 0.40 bar	XD PA089	1V056	
6 middle 2	1V101	1S062 0.40 bar	XD PA275	1V102	
6 rear	1V023	1S044 0.40 bar	XD PA101	1V043	

	1V039	1S028 0..40 bar	XD PA072	1V014	1 front
	1V047	1S026 0.40 bar	XD PA084	1V008	1 middle
	1V084	1S053 0..40 bar	XD PA270	1V083	1 middle 2
	1V034	1S024 0..40 bar	XD PA096	1V015	1 rear
	1V044	1S038 0..40 bar	XD PA073	1V004	2 front
	1V049	1S039 0..40 bar	XD PA085	1V026	2 middle
	1V086	1S054 0..40 bar	XD PA271	1V085	2 middle 2
	1V046	1S040 0..40 bar	XD PA097	1V009	2 rear
	1V045	1S009 0.40 bar	XD PA074	1V016	3 front
	1V048	1S017 0..40 bar	XD PA086	1V027	3 middle
	1V088	1S055 0.40 bar	XD PA272	1V087	3 middle 2
	1V038	1S006 0..40 bar	XD PA098	1V011	3 rear
	1V037	1S041 0..40 bar	XD PA075	1V012	4 front
	1V035	1S042 0..40 bar	XD PA087	1V013	4 middle
	1V090	1S056 0..40 bar	XD PA273	1V089	4 middle 2
	1V051	1S043 0..40 bar	XD PA099	1V002	4 rear
	1V032	1S029 0..40 bar	XD PA076	1V003	5 front
	1V052	1S030 0..40 bar	XD PA088	1V007	5 middle
	1V091	1S057 0..40 bar	XD PA274	1V092	5 middle 2
	1V033	1S031 0..40 bar	XD PA100	1V005	5 rear

+HK1.10
gantry 3

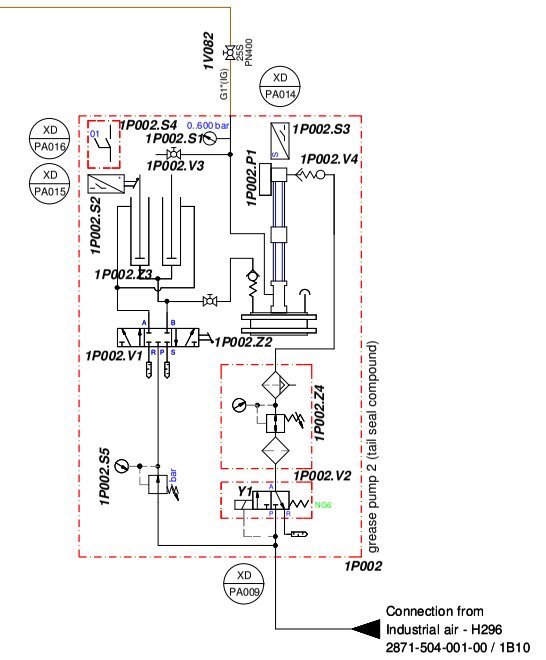

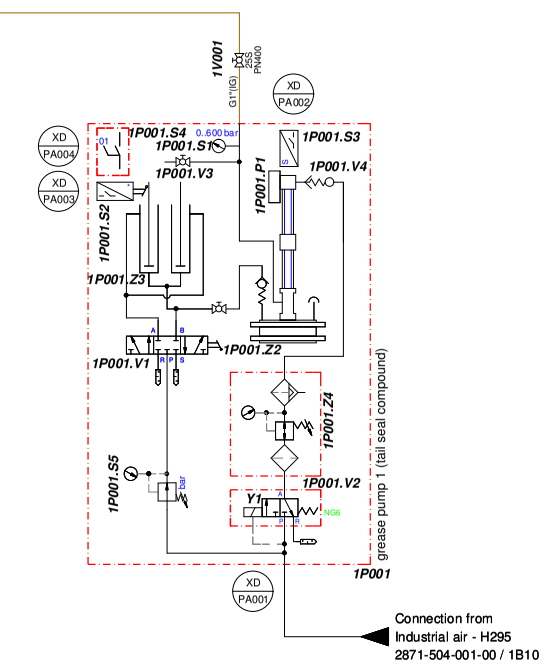

Arrangement of grease lines

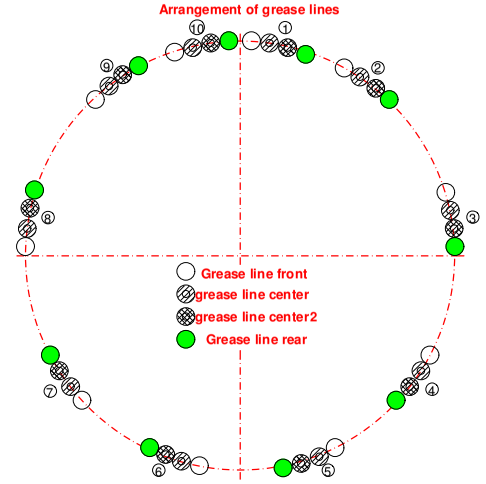

Zur Fertigung freigegeben
unterliegt dem Änderungsdienst

Prüfer: GUTENKUR

Datum: 11.08.2010

Index	Revision	Date	Editor	Date	Ch. by
	Konzept ==> Planung	10.08.2010	METSCHUI	11.08.2010	GUTENKUR

The reproduction, distribution and utilization of this document as well as the communication of the contents to others without express authorization is prohibited. Offenders will be held liable for the payment of damages. All rights reserved in the event of a patent, utility model or design. ISO 16016

HERRENKNECHT AG
Schlehenweg 2
D-77963 Schwanau
Tel.: 07824/302-0
Fax: 07824/3403
Info@Herrenknecht.de

HERRENKNECHT
Tunnelvortriebstechnik

Type of drawing	Projekt	Material
schematic	S-623_624	

Name
lubrication diagram - Tail seal compound

	Date	Name
Edited	10.08.2010	METSCHUI
For checking	10.08.2010	METSCHUI
Checked	11.08.2010	GUTENKUR

Drawing no.	Page no.	Index
2871-502-002-00	1 / 1	

Norm	Article number	Developed from	Weight/KG	Format
	25265884	S-551		A1

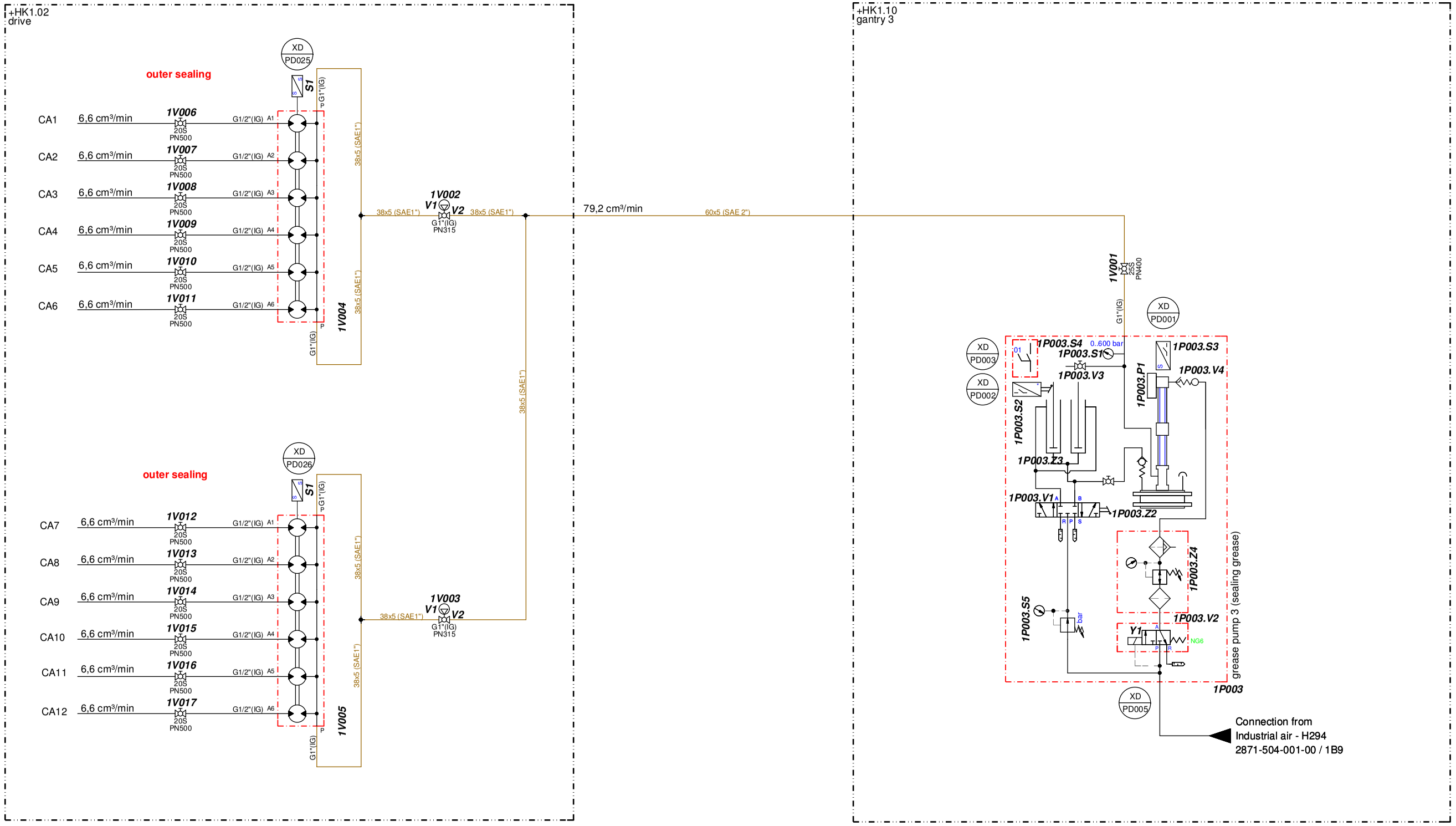

Zur Fertigung freigegeben
unterliegt dem Änderungsdienst

Prüfer: GUTENKUR

Datum: 11.08.2010

Index	Revision	Date	Editor	Date	Ch. by
	Konzept ==> Planung	10.08.2010	METSCHUI	11.08.2010	GUTENKUR

The reproduction, distribution and utilization of this document as well as the communication of the contents to others without express authorization is prohibited. Offenders will be held liable for the payment of damages. All rights reserved in the event of a patent, utility model or design. ISO 16016

HERRENKNECHT AG
Schlehenweg 2
D-77963 Schwanau
Tel.: 07824/302-0
Fax: 07824/3403
Info@Herrenknecht.de

HERRENKNECHT Tunnelvortriebstechnik

	Date	Name
Edited	10.08.2010	METSCHUI
For checking	10.08.2010	METSCHUI
Checked	11.08.2010	GUTENKUR

Type of drawing: schematic
Projekt: S-623_624
Material:

Name: lubrication diagram - Labyrinth-sealing (HBW)

Drawing no.: 2871-502-003-00
Page no.: 1 / 1
Index:

Norm	Article number	Developed from	Weight/KG	Format
	25265885	S-551		A2

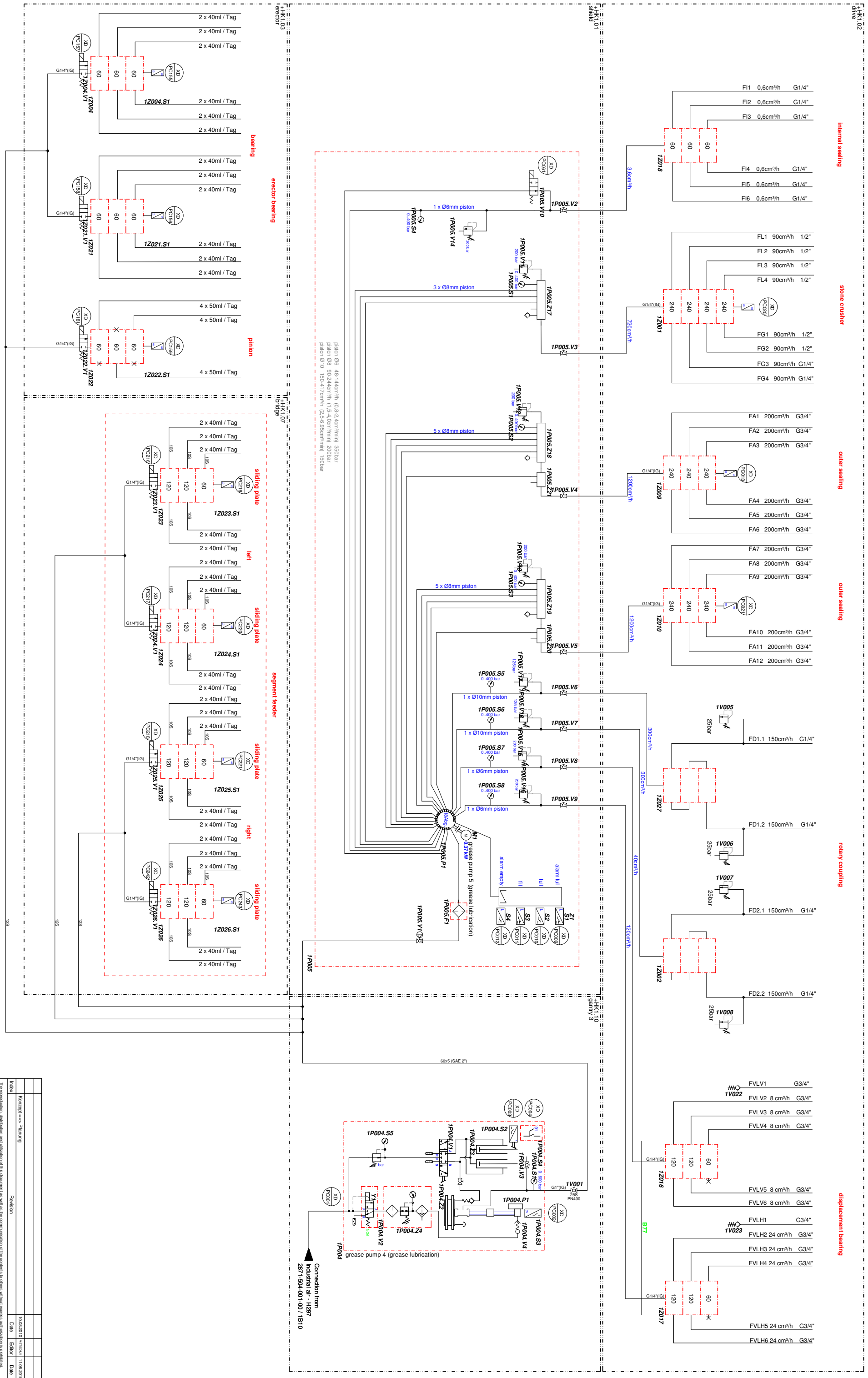

Zur Fertigung freigegeben
unterliegt dem Änderungsdienst
Prüfer: GUTENKUR
Datum: 11.08.2010

	Name	Date
Edited	METSCHUI	10.08.2010
For checking	METSCHUI	10.08.2010
Checked	GUTENKUR	11.08.2010

HERRENKNECHT AG
Schlehenweg 2
D-77963 Schwanau
Tel.: 07824/302-0
Fax: 07824/3403
Info@Herrenknecht.de

HERRENKNECHT
Tunnelvortriebstechnik

Index	Revision	Date	Editor	Date	Ch. by
	Konzept ==> Planung	10.08.2010	METSCHUI	11.08.2010	GUTENKUR

The reproduction, distribution and utilization of this document as well as the communication of its contents to others without express authorization is prohibited. Offenders will be held liable for the payment of damages. All rights reserved in the event of a patent, utility model or design. ISO 16016

Drawing no.: 2871-502-004-00
Article number: 25265886
Norm:
Developed from: S-551
Weight/KG:
Format: A1
Page no.: 1 / 1
Index:
Type of drawing: schematic
Projekt: S-623_624
Material:
Name: lubrication diagram - Grease lubrication

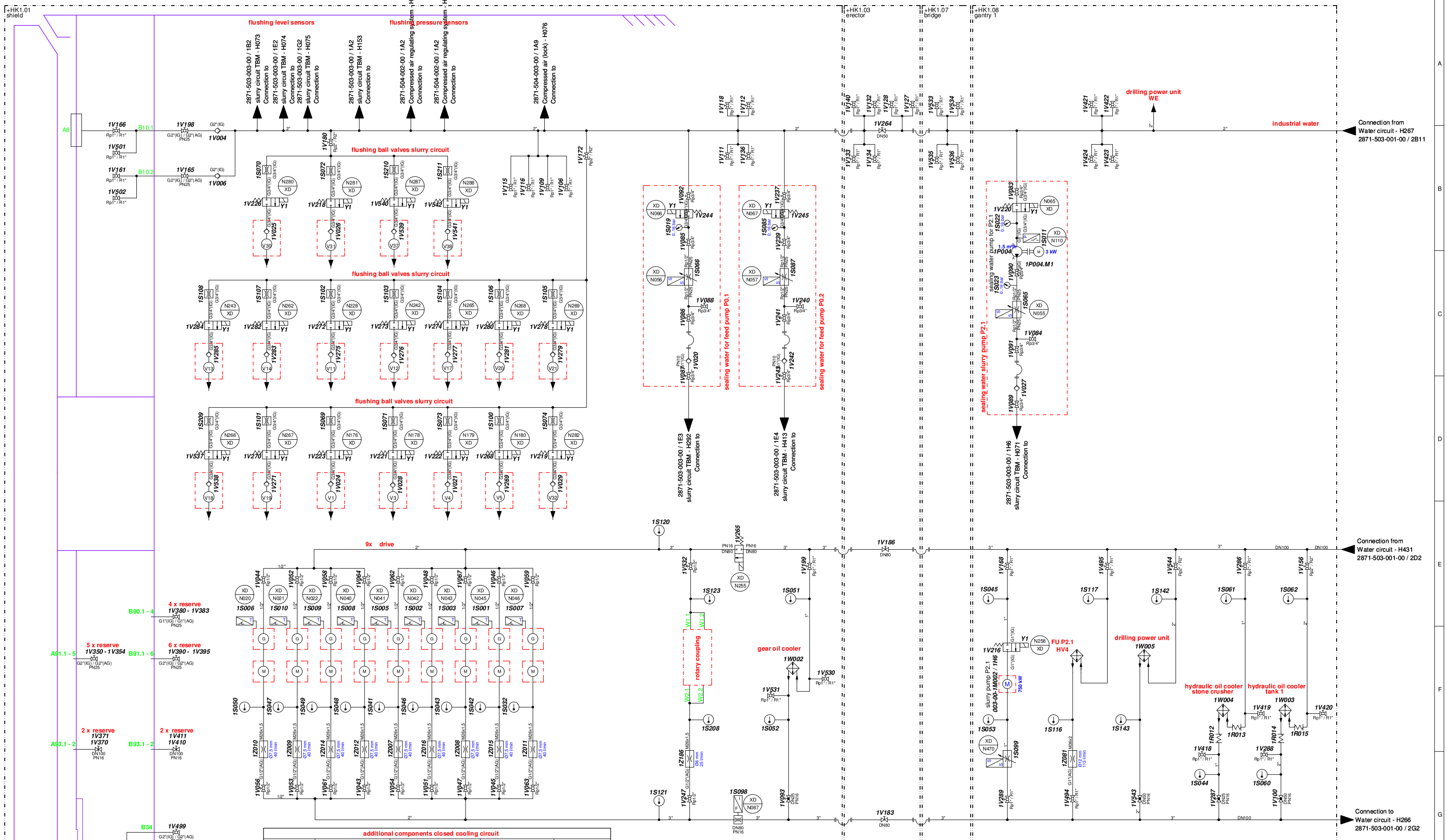

additional components closed cooling circuit

component	symbol	resource label	quantitiy	comment
exhauster		1Z002 1Z004 1Z006 1Z003 1Z005 1Z072 1Z001 1Z082 1Z083	shield + 2x for each gantry	install at highest points
drain valve		1V144 1V110 1V107 1V120 1V125 1V117 1V246 1V496 1V497	shield + 2x for each gantry	install at lowest points

Zur Fertigung freigegeben
unterliegt dem Änderungsdienst

Prüfer: GUTENKUR

Datum: 12.11.2010

Index	Revision	Date	Editor	Date	Ch. by
A	Spülung V50, V51 Ort geändert (2C5)	12.08.2010	METSCHUI	12.11.2010	GUTENKUR
	Konzept ==> Planung	10.08.2010	METSCHUI	11.08.2010	GUTENKUR

The reproduction, distribution and utilization of this document as well as the communication of the contents to others without express authorization is prohibited. Offenders will be held liable for the payment of damages. All rights reserved in the event of a patent, utility model or design. ISO 16016

HERRENKNECHT AG
Schlehenweg 2
D-77963 Schwanau
Tel.: 07824/302-0
Fax: 07824/3403
Info@Herrenknecht.de

HERRENKNECHT
Tunnelvortriebstechnik

	Date	Name
Edited	12.08.2010	METSCHUI
For checking	11.11.2010	METSCHUI
Checked	12.11.2010	GUTENKUR

Type of drawing: schematic
Projekt: S-623_624
Material:
Name: water diagram - Water circuit

Drawing no.: 2871-503-001-00
Page no.: 1 / 2
Index: A

Norm	Article number	Developed from	Weight/KG	Format
	25265887	S-551		A1

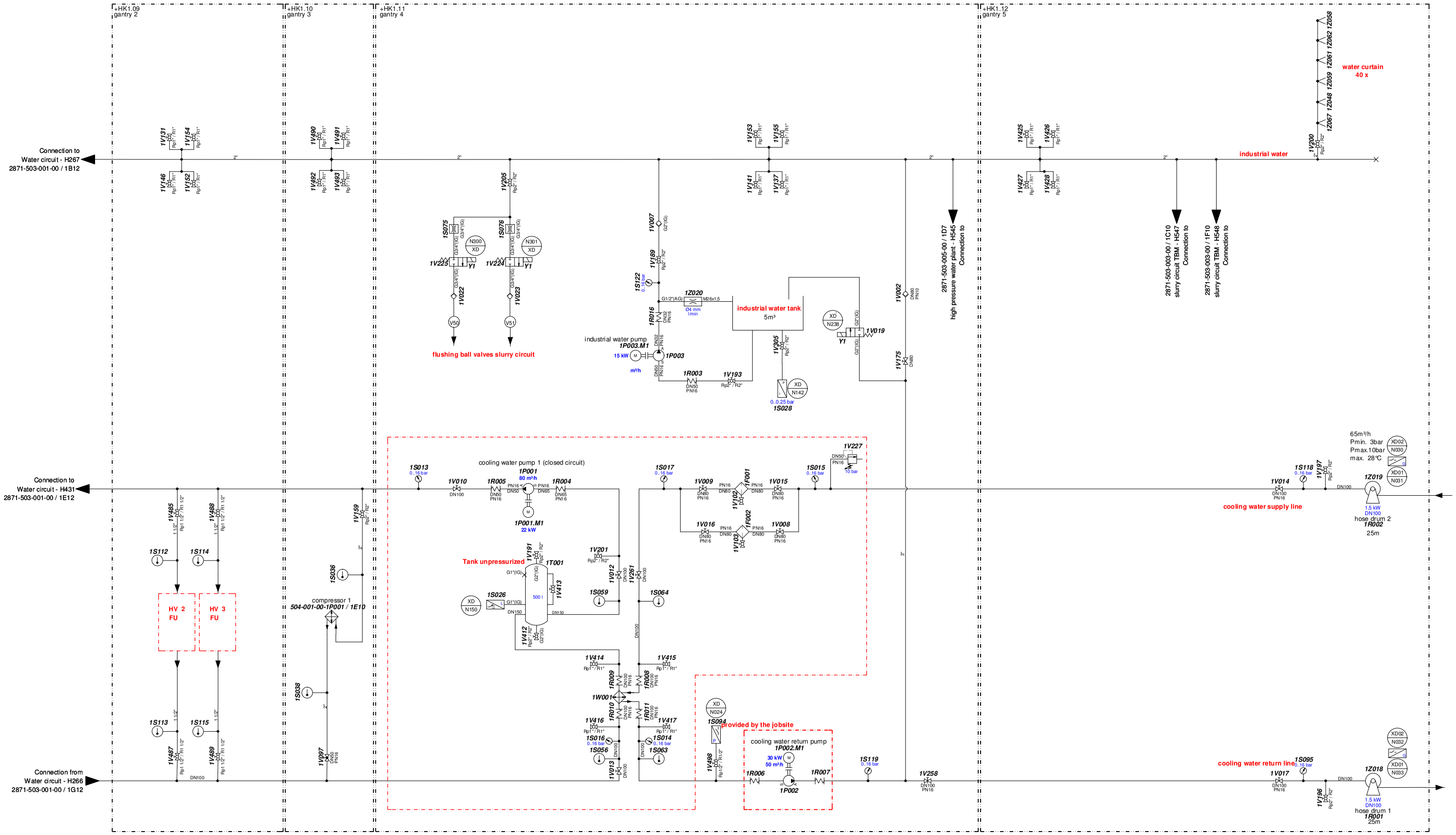

Index	Revision	Date	Editor	Date	Ch. by
A	Spülung V50, V51 Ort geändert (2C5)	12.08.2010	METSCHUI	12.11.2010	GUTENKUR
	Konzept ==> Planung	10.08.2010	METSCHUI	11.08.2010	GUTENKUR

The reproduction, distribution and utilization of this document as well as the communication of the contents to others without express authorization is prohibited. Offenders will be held liable for the payment of damages. All rights reserved in the event of a patent, utility model or design. ISO 16016

HERRENKNECHT AG
Schlehenweg 2
D-77963 Schwanau
Tel.: 07824/302-0
Fax: 07824/3403
Info@Herrenknecht.de

HERRENKNECHT
Tunnelvortriebstechnik

Type of drawing	Projekt	Material
schematic	S-623_624	

Name
water diagram - Water circuit

	Date	Name
Edited	12.08.2010	METSCHUI
For checking	11.11.2010	METSCHUI
Checked	12.11.2010	GUTENKUR

Drawing no.	Page no.	Index
2871-503-001-00	2 / 2	A

Norm	Article number	Developed from	Weight/KG	Format
	25265887	S-551		A1

Zur Fertigung freigegeben
unterliegt dem Änderungsdienst

Prüfer: GUTENKUR

Datum: 12.11.2010

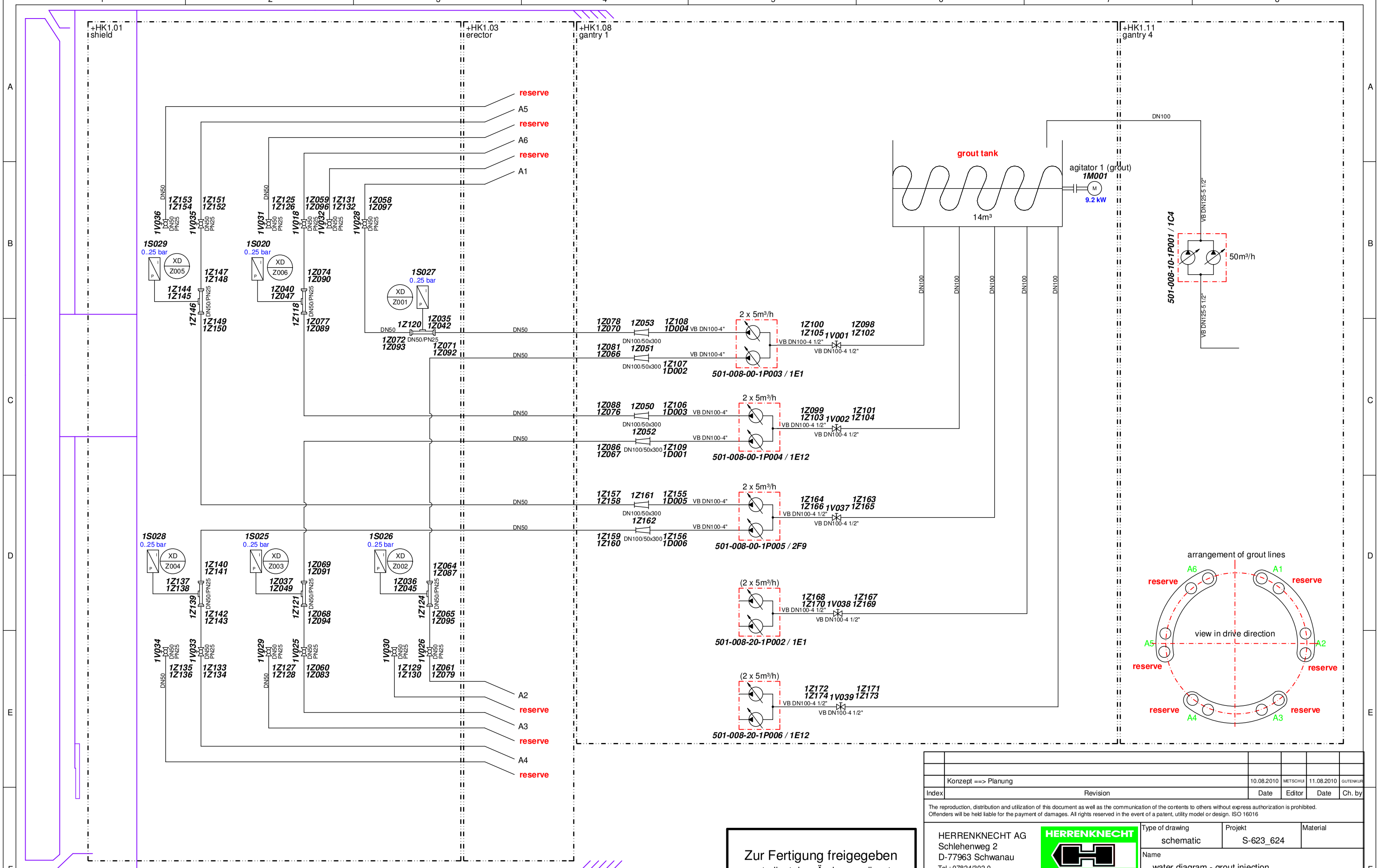

Zur Fertigung freigegeben
unterliegt dem Änderungsdienst

Prüfer: GUTENKUR

Datum: 11.08.2010

Index	Revision	Date	Editor	Date	Ch. by
	Konzept ==> Planung	10.08.2010	METSCHUI	11.08.2010	GUTENKUR

The reproduction, distribution and utilization of this document as well as the communication of the contents to others without express authorization is prohibited. Offenders will be held liable for the payment of damages. All rights reserved in the event of a patent, utility model or design. ISO 16016

HERRENKNECHT AG
Schlehenweg 2
D-77963 Schwanau
Tel.: 07824/302-0
Fax: 07824/3403
Info@Herrenknecht.de

HERRENKNECHT
Tunnelvortriebstechnik

	Date	Name
Edited	10.08.2010	METSCHUI
For checking	10.08.2010	METSCHUI
Checked	11.08.2010	GUTENKUR

Type of drawing	Projekt	Material
schematic	S-623_624	

Name
water diagram - grout injection

Drawing no.	Page no.	Index
2871-503-002-00	1 / 1	

Norm	Article number	Developed from	Weight/KG	Format
	25265888	S-551		A2

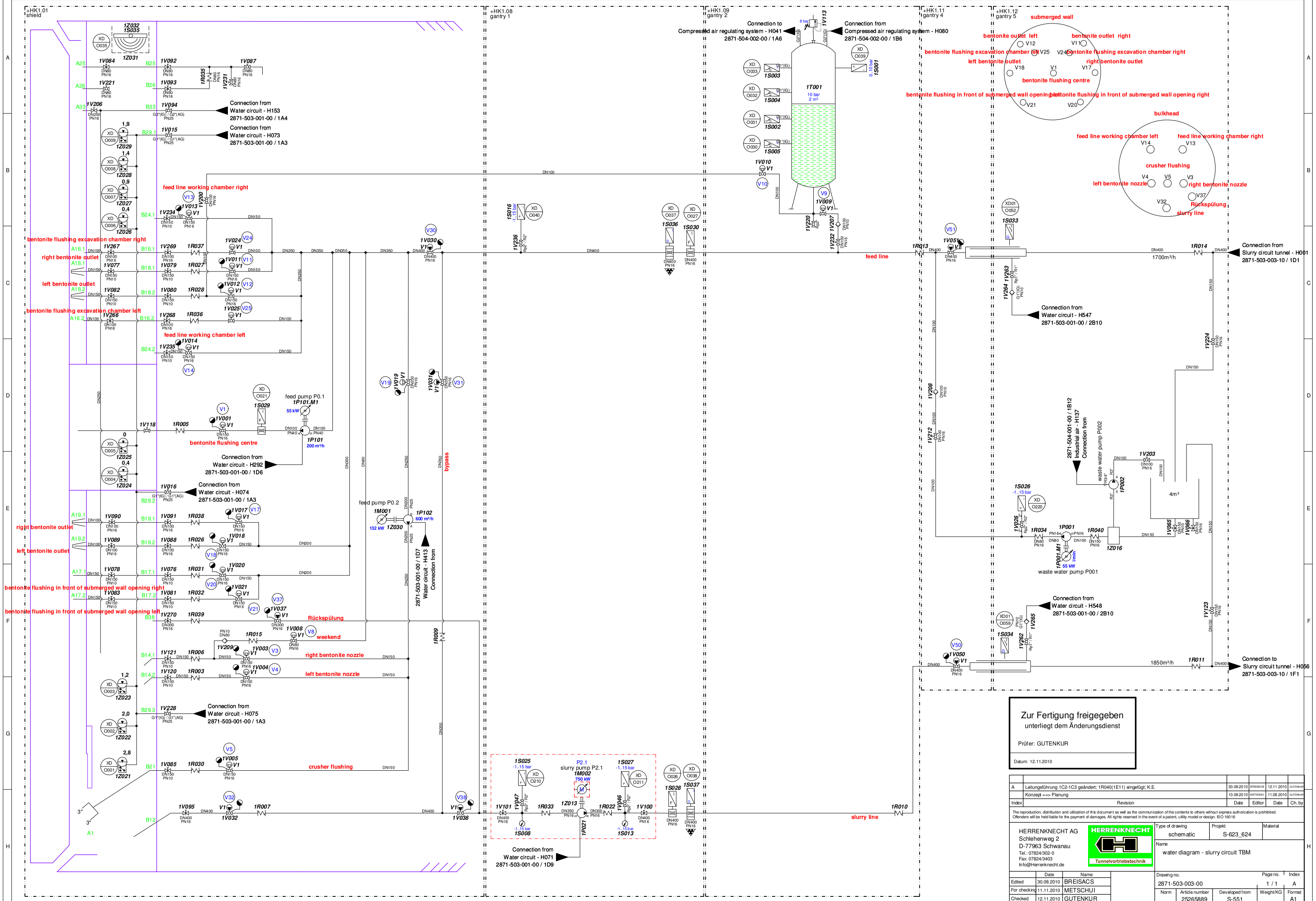

Zur Fertigung freigegeben
unterliegt dem Änderungsdienst

Prüfer: GUTENKUR

Datum: 12.11.2010

Index	Revision	Date	Editor	Date	Ch. by
A	Leitungsführung 1C2-1C3 geändert; 1R040(1E11) eingefügt; K.E.	30.08.2010	BREISACS	12.11.2010	GUTENKUR
	Konzept ==> Planung	10.08.2010	METSCHUI	11.08.2010	GUTENKUR

The reproduction, distribution and utilization of this document as well as the communication of the contents to others without express authorization is prohibited. Offenders will be held liable for the payment of damages. All rights reserved in the event of a patent, utility model or design. ISO 16016

HERRENKNECHT AG
Schlehenweg 2
D-77963 Schwanau
Tel.: 07824/302-0
Fax: 07824/3403
Info@Herrenknecht.de

HERRENKNECHT
Tunnelvortriebstechnik

Type of drawing	Projekt	Material
schematic	S-623_624	

Name
water diagram - slurry circuit TBM

	Date	Name
Edited	30.08.2010	BREISACS
For checking	11.11.2010	METSCHUI
Checked	12.11.2010	GUTENKUR

Drawing no.	Page no.	Index
2871-503-003-00	1 / 1	A

Norm	Article number	Developed from	Weight/KG	Format
	25265889	S-551		A1

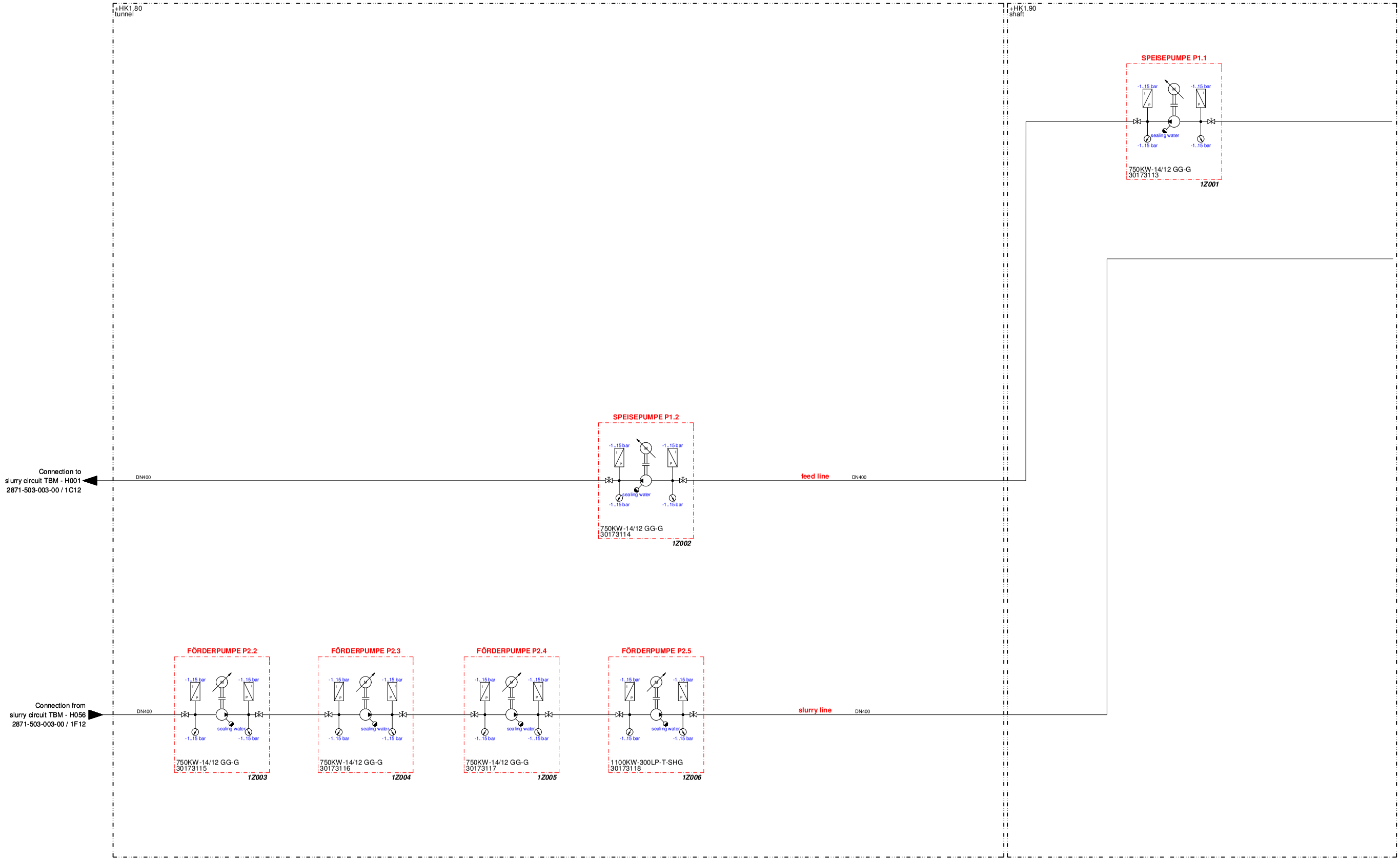

Zur Fertigung freigegeben
unterliegt dem Änderungsdienst

Prüfer: GUTENKUR

Datum: 07.12.2010

Index	Revision	Date	Editor	Date	Ch. by
A	Revision	11.11.2010	METSCHUI	07.12.2010	GUTENKUR

The reproduction, distribution and utilization of this document as well as the communication of the contents to others without express authorization is prohibited. Offenders will be held liable for the payment of damages. All rights reserved in the event of a patent, utility model or design. ISO 16016

HERRENKNECHT AG
Schlehenweg 2
D-77963 Schwanau
Tel.: 07824/302-0
Fax: 07824/3403
Info@Herrenknecht.de

HERRENKNECHT
Tunnelvortriebstechnik

Type of drawing	Projekt	Material
schematic	S-623_624	

Name
water diagram - Slurry circuit tunnel

	Date	Name
Edited	11.11.2010	METSCHUI
For checking	06.12.2010	METSCHUI
Checked	07.12.2010	GUTENKUR

Drawing no.	Page no.	Index
2871-503-003-10	1 / 1	A

Norm	Article number	Developed from	Weight/KG	Format
	25265890	S-551		A1

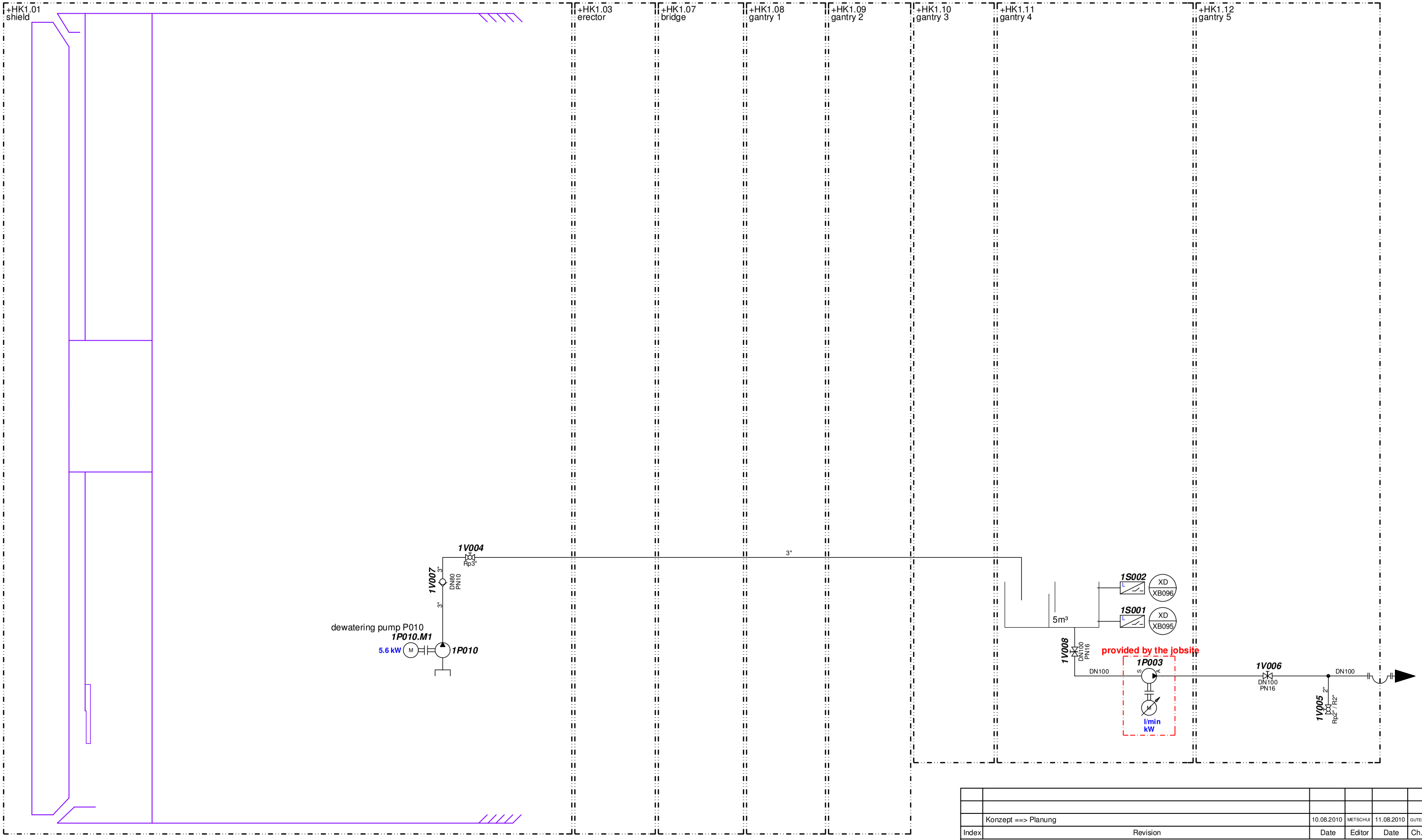

Zur Fertigung freigegeben
unterliegt dem Änderungsdienst

Prüfer: GUTENKUR

Datum: 11.08.2010

Index	Revision	Date	Editor	Date	Ch. by
	Konzept ==> Planung	10.08.2010	METSCHUI	11.08.2010	GUTENKUR

The reproduction, distribution and utilization of this document as well as the communication of the contents to others without express authorization is prohibited. Offenders will be held liable for the payment of damages. All rights reserved in the event of a patent, utility model or design. ISO 16016

HERRENKNECHT AG
Schlehenweg 2
D-77963 Schwanau
Tel.: 07824/302-0
Fax: 07824/3403
Info@Herrenknecht.de

HERRENKNECHT
Tunnelvortriebstechnik

	Date	Name
Edited	10.08.2010	METSCHUI
For checking	10.08.2010	METSCHUI
Checked	11.08.2010	GUTENKUR

Type of drawing	Projekt	Material
schematic	S-623_624	

Name
water diagram - Dewatering

Drawing no.	Page no.	Index
2871-503-004-00	1 / 1	

Norm	Article number	Developed from	Weight/KG	Format
	25265891	S-551		A2

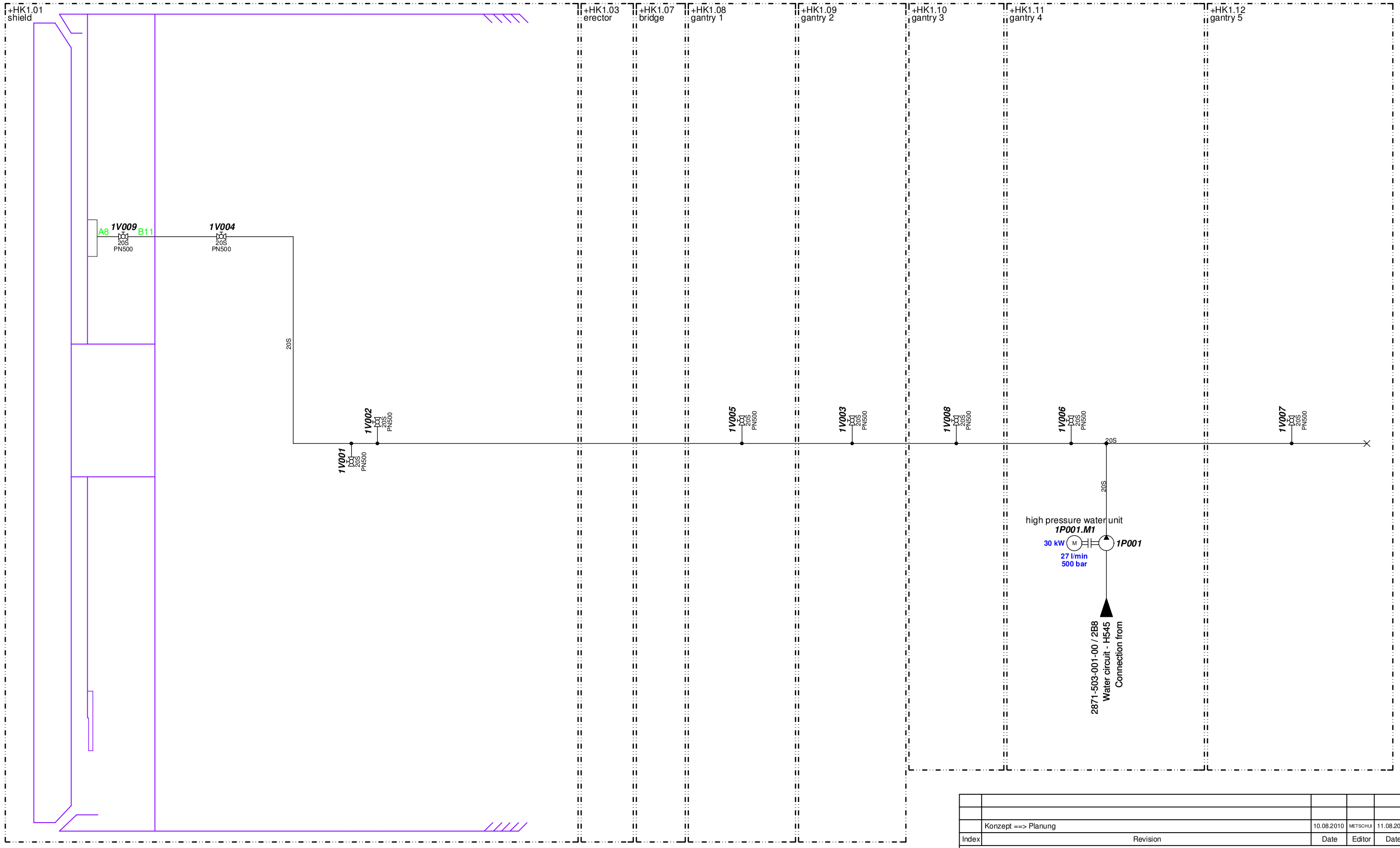

Index	Revision	Date	Editor	Date	Ch. by
	Konzept ==> Planung	10.08.2010	METSCHUI	11.08.2010	GUTENKUR

The reproduction, distribution and utilization of this document as well as the communication of the contents to others without express authorization is prohibited. Offenders will be held liable for the payment of damages. All rights reserved in the event of a patent, utility model or design. ISO 16016

HERRENKNECHT AG
Schlehenweg 2
D-77963 Schwanau
Tel.: 07824/302-0
Fax: 07824/3403
Info@Herrenknecht.de

HERRENKNECHT
Tunnelvortriebstechnik

Type of drawing: schematic
Projekt: S-623_624
Material:
Name: water diagram - high pressure water plant

	Date	Name
Edited	10.08.2010	METSCHUI
For checking	10.08.2010	METSCHUI
Checked	11.08.2010	GUTENKUR

Drawing no.: 2871-503-005-00
Page no.: 1 / 1
Index:

Norm	Article number	Developed from	Weight/KG	Format
	25265898	S-551		A2

Zur Fertigung freigegeben
unterliegt dem Änderungsdienst

Prüfer: GUTENKUR

Datum: 11.08.2010

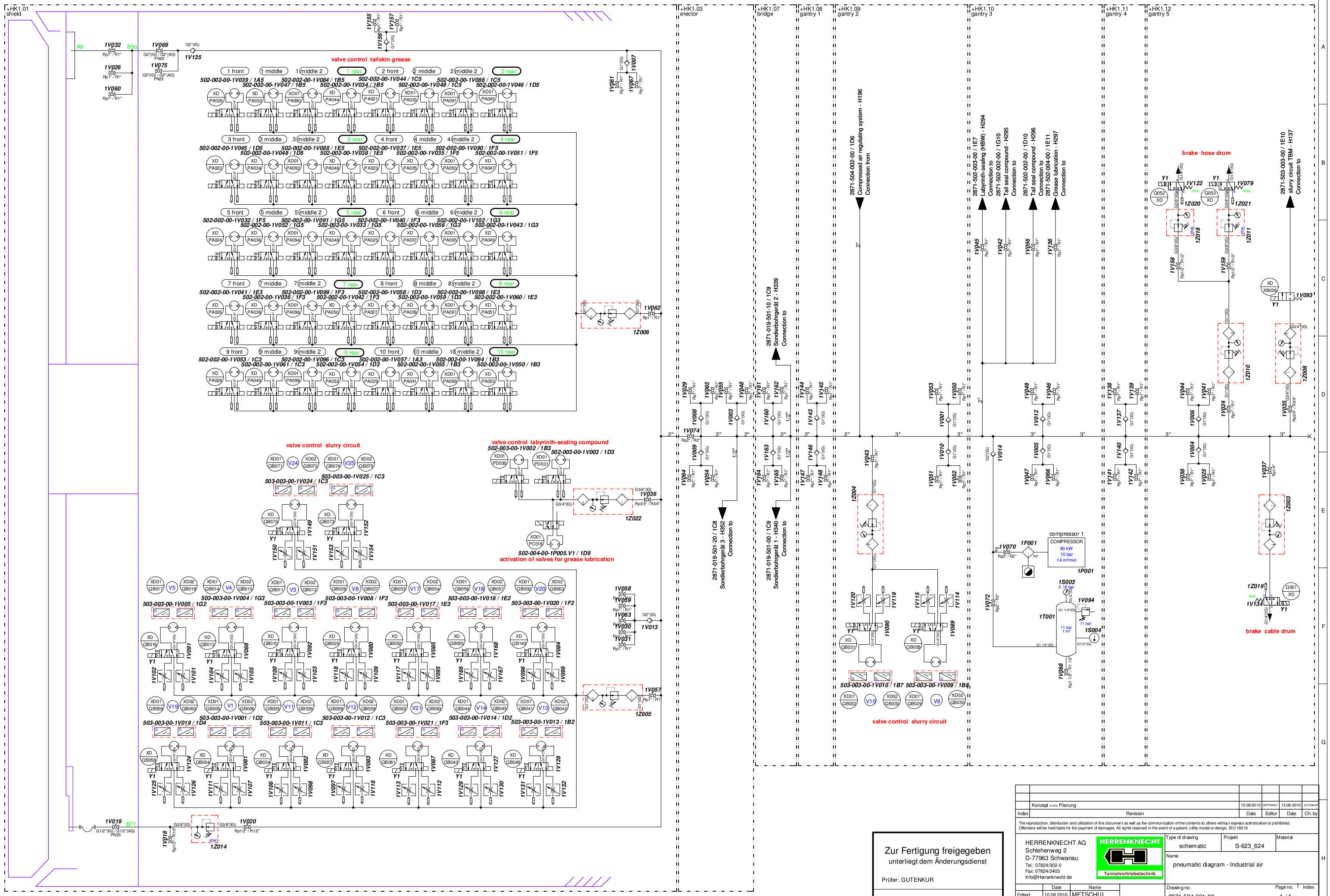

Zur Fertigung freigegeben
unterliegt dem Änderungsdienst

Prüfer: GUTENKUR

Datum: 12.08.2010

Index	Revision	Date	Editor	Date	Ch. by
	Konzept ==> Planung	10.08.2010	METSCHUI	12.08.2010	GUTENKUR

The reproduction, distribution and utilization of this document as well as the communication of the contents to others without express authorization is prohibited. Offenders will be held liable for the payment of damages. All rights reserved in the event of a patent, utility model or design. ISO 16016

HERRENKNECHT AG
Schlehenweg 2
D-77963 Schwanau
Tel.: 07824/302-0
Fax: 07824/3403
info@Herrenknecht.de

HERRENKNECHT
Tunnelvortriebstechnik

	Date	Name
Edited	10.08.2010	METSCHUI
For checking	10.08.2010	METSCHUI
Checked	12.08.2010	GUTENKUR

Type of drawing	Projekt	Material
schematic	S-623_624	

Name: pneumatic diagram - Industrial air

Drawing no.	Page no.	Index
2871-504-001-00	1 / 1	

Norm	Article number	Developed from	Weight/KG	Format
	25265892	S-551		A1

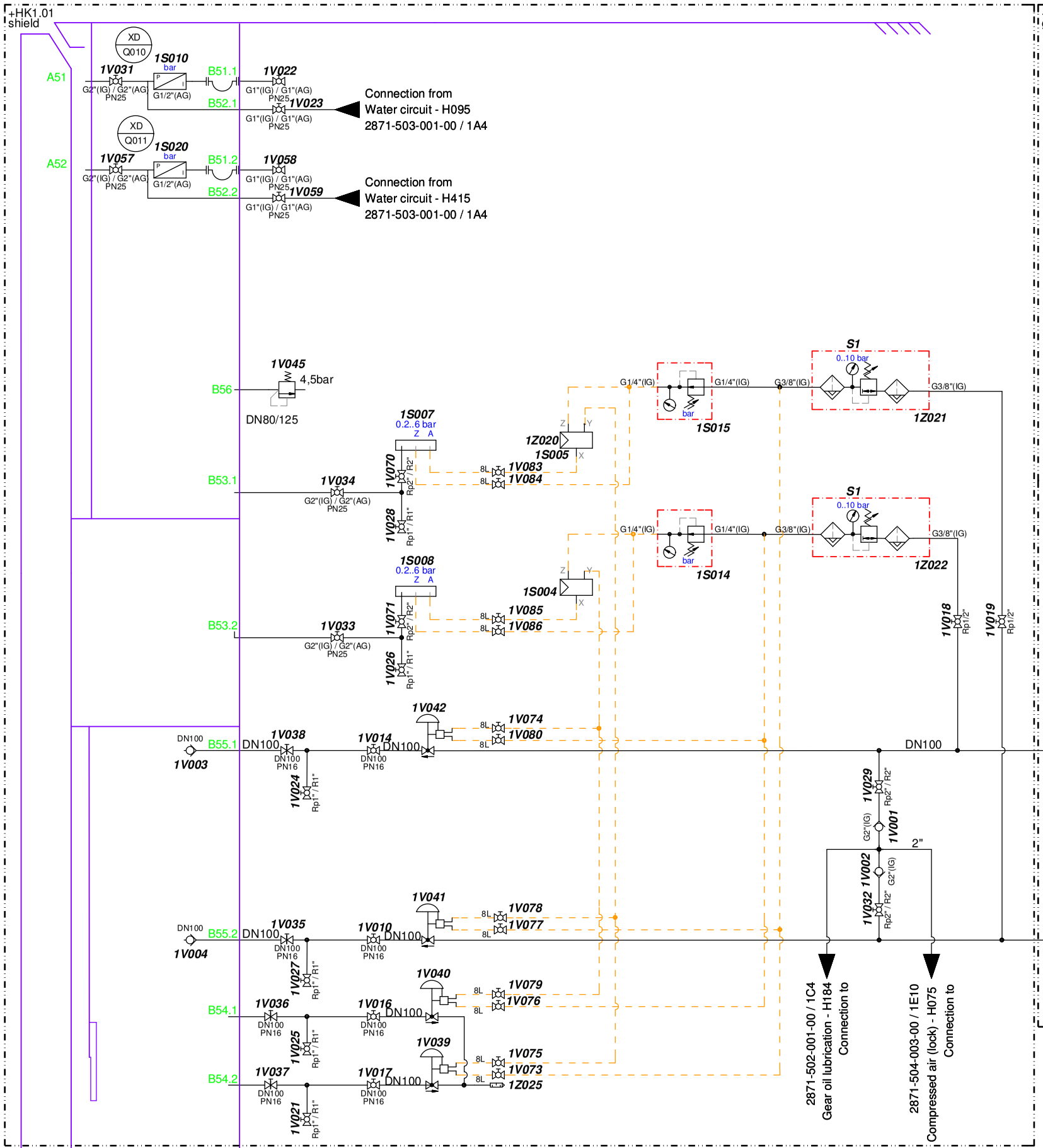

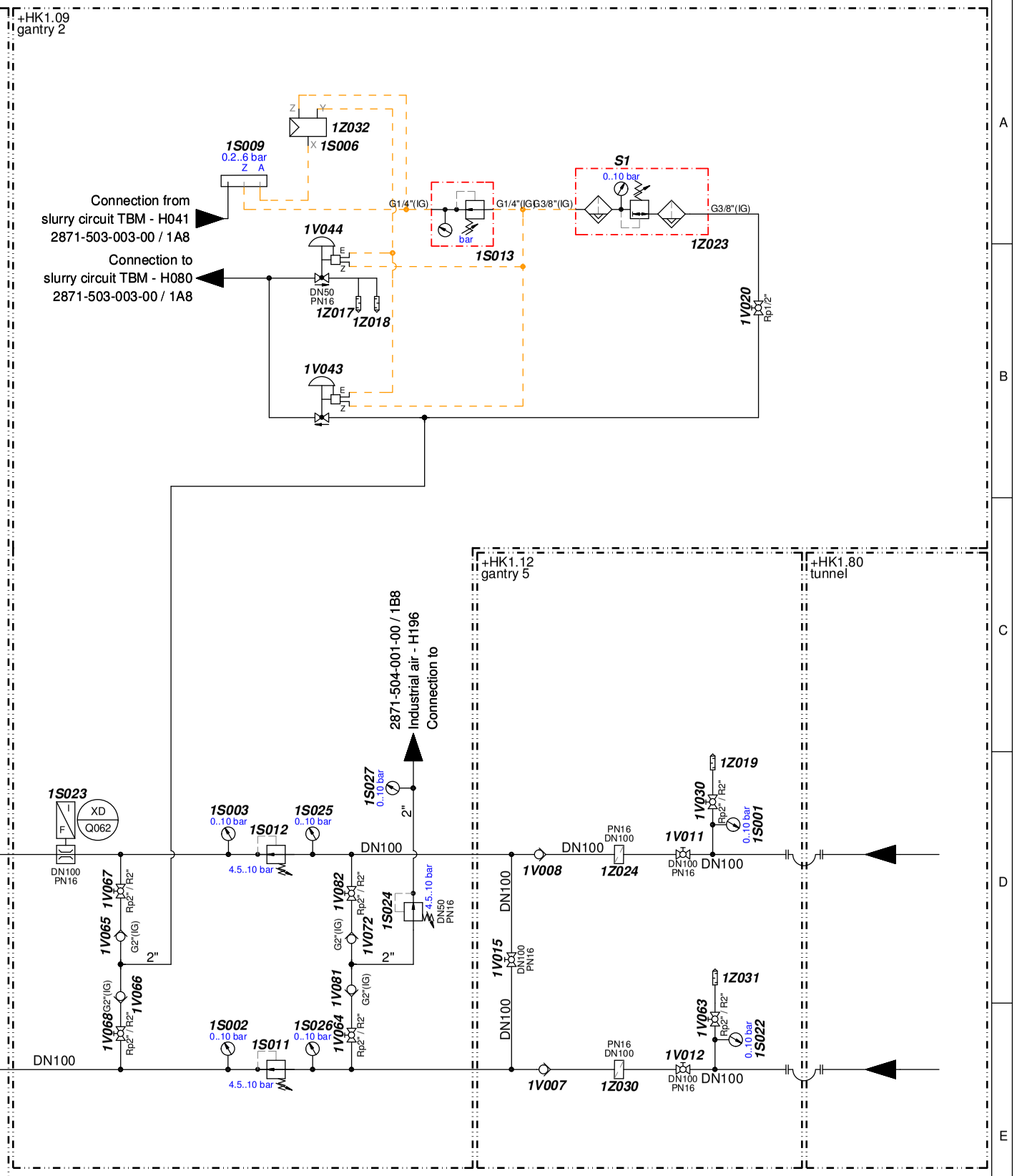

Zur Fertigung freigegeben
unterliegt dem Änderungsdienst

Prüfer: GUTENKUR

Datum: 11.08.2010

Index	Revision	Date	Editor	Date	Ch. by
	Konzept ==> Planung	10.08.2010	METSCHUI	11.08.2010	GUTENKUR

The reproduction, distribution and utilization of this document as well as the communication of the contents to others without express authorization is prohibited. Offenders will be held liable for the payment of damages. All rights reserved in the event of a patent, utility model or design. ISO 16016

HERRENKNECHT AG
Schlehenweg 2
D-77963 Schwanau
Tel.: 07824/302-0
Fax: 07824/3403
Info@Herrenknecht.de

HERRENKNECHT
Tunnelvortriebstechnik

	Date	Name
Edited	10.08.2010	METSCHUI
For checking	10.08.2010	METSCHUI
Checked	11.08.2010	GUTENKUR

Type of drawing	Projekt	Material
schematic	S-623_624	

Name
pneumatic diagram - Compressed air regulating system

Drawing no.	Page no.	Index
2871-504-002-00	1 / 1	

Norm	Article number	Developed from	Weight/KG	Format
	25265893	S-551		A2

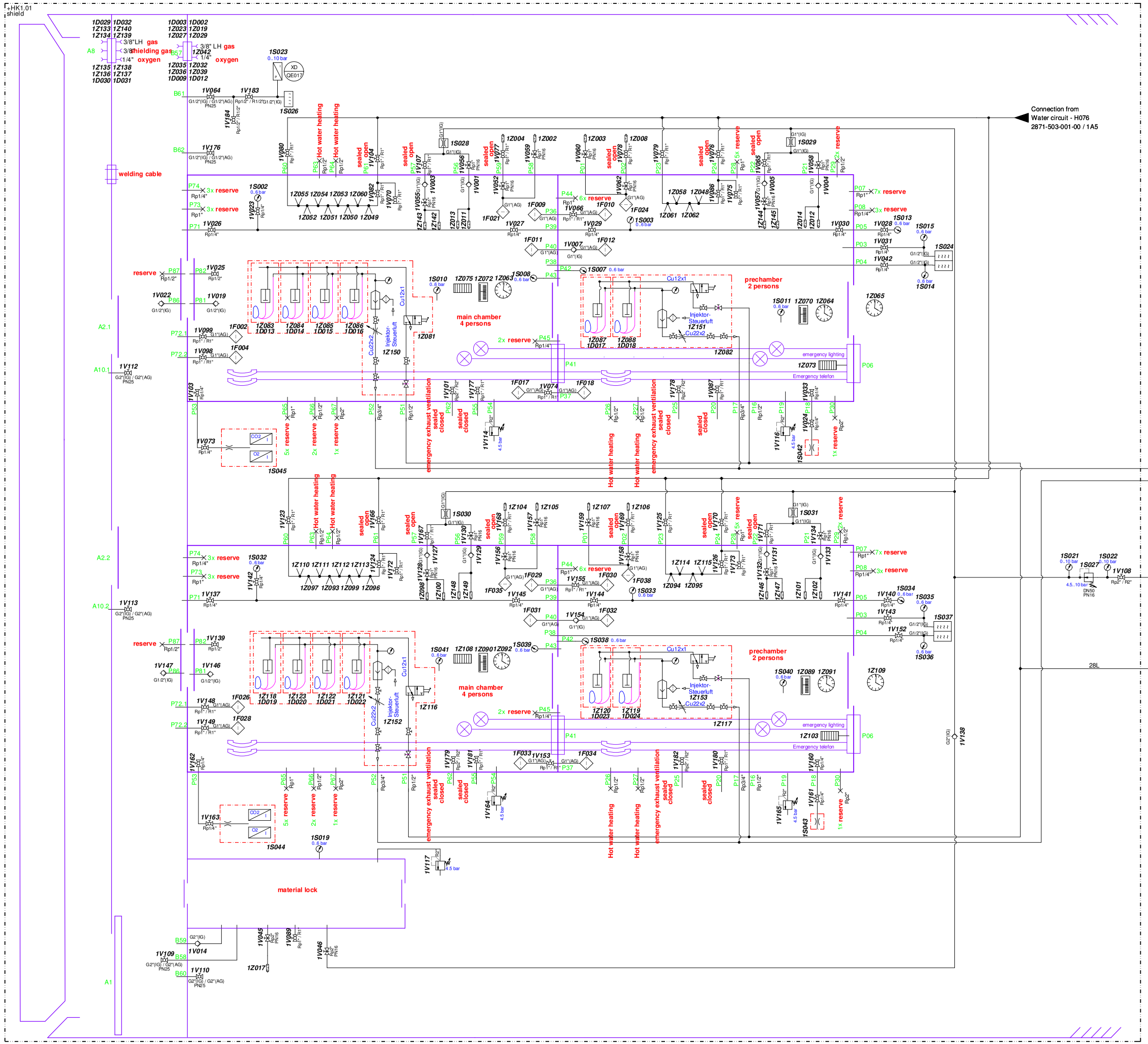

Zur Fertigung freigegeben
unterliegt dem Änderungsdienst

Prüfer: GUTENKUR

Datum: 12.11.2010

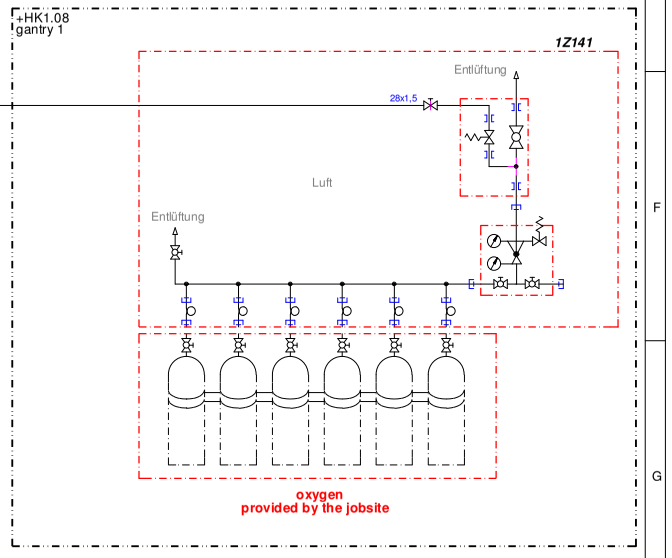

Index	Revision	Date	Editor	Date	Ch. by
A	Revision	15.09.2010	METSCHUI	12.11.2010	GUTENKUR
	Konzept ==> Planung	10.08.2010	METSCHUI	11.08.2010	GUTENKUR

The reproduction, distribution and utilization of this document as well as the communication of the contents to others without express authorization is prohibited. Offenders will be held liable for the payment of damages. All rights reserved in the event of a patent, utility model or design. ISO 16016

HERRENKNECHT AG
Schlehenweg 2
D-77963 Schwanau
Tel.: 07824/302-0
Fax: 07824/3403
Info@Herrenknecht.de

HERRENKNECHT
Tunnelvortriebstechnik

Type of drawing	Projekt	Material
schematic	S-623_624	

Name: pneumatic diagram - Compressed air (lock)

	Date	Name
Edited	15.09.2010	METSCHUI
For checking	15.09.2010	METSCHUI
Checked	12.11.2010	GUTENKUR

Drawing no.	Page no.	Index
2871-504-003-00	1 / 1	A

Norm	Article number	Developed from	Weight/KG	Format
	25265894	S-546		A1

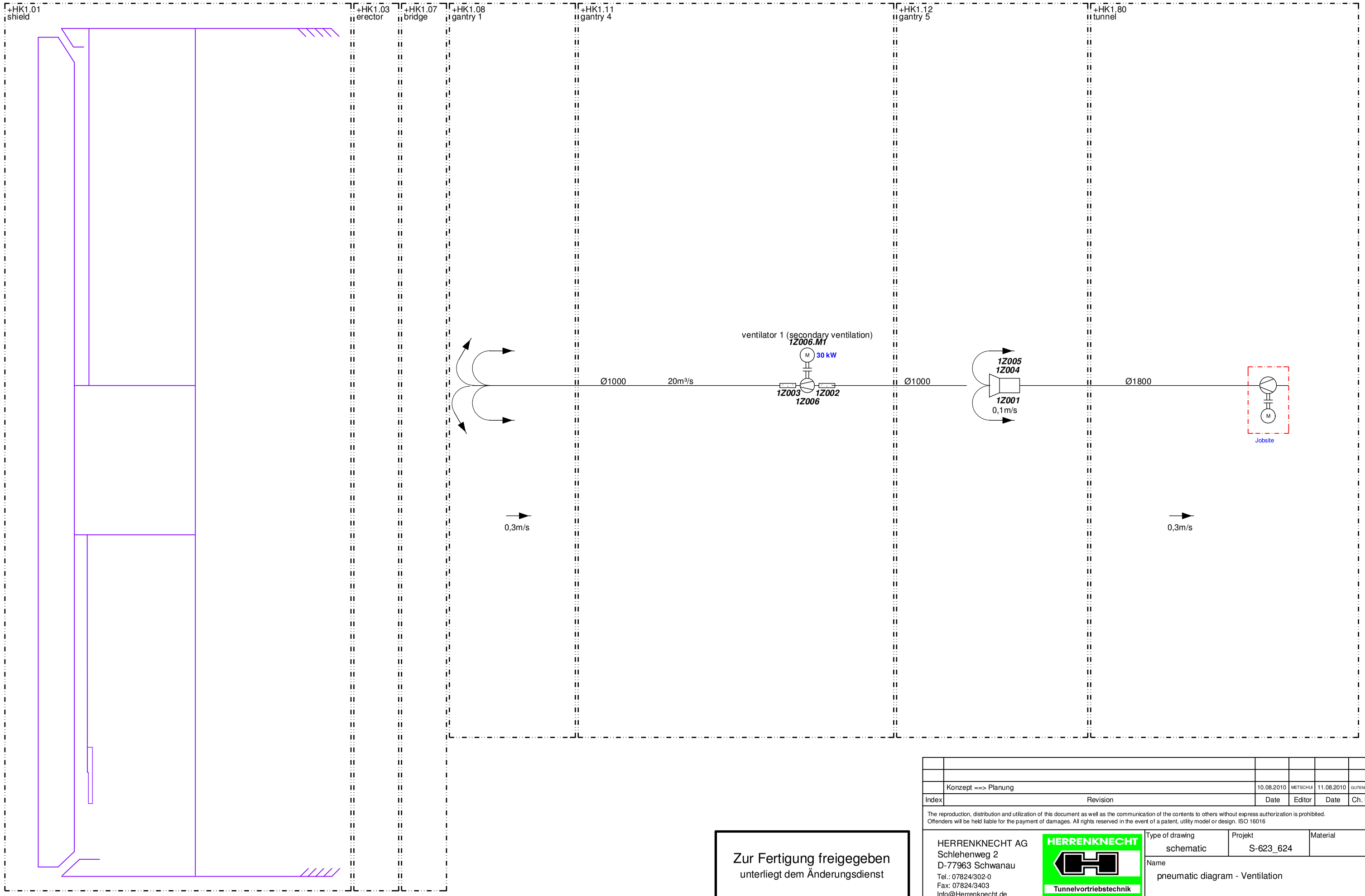

Zur Fertigung freigegeben
unterliegt dem Änderungsdienst

Prüfer: GUTENKUR

Datum: 11.08.2010

Index	Revision	Date	Editor	Date	Ch. by
	Konzept ==> Planung	10.08.2010	METSCHUI	11.08.2010	GUTENKUR

The reproduction, distribution and utilization of this document as well as the communication of the contents to others without express authorization is prohibited.
Offenders will be held liable for the payment of damages. All rights reserved in the event of a patent, utility model or design. ISO 16016

HERRENKNECHT AG
Schlehenweg 2
D-77963 Schwanau
Tel.: 07824/302-0
Fax: 07824/3403
Info@Herrenknecht.de

HERRENKNECHT
Tunnelvortriebstechnik

	Date	Name
Edited	10.08.2010	METSCHUI
For checking	10.08.2010	METSCHUI
Checked	11.08.2010	GUTENKUR

Type of drawing: schematic
Projekt: S-623_624
Material:
Name: pneumatic diagram - Ventilation
Drawing no.: 2871-504-004-00
Page no.: 1 / 1
Index:

Norm	Article number	Developed from	Weight/KG	Format
	25265895	S-551		A2

+HK1.05
erector rotational frame

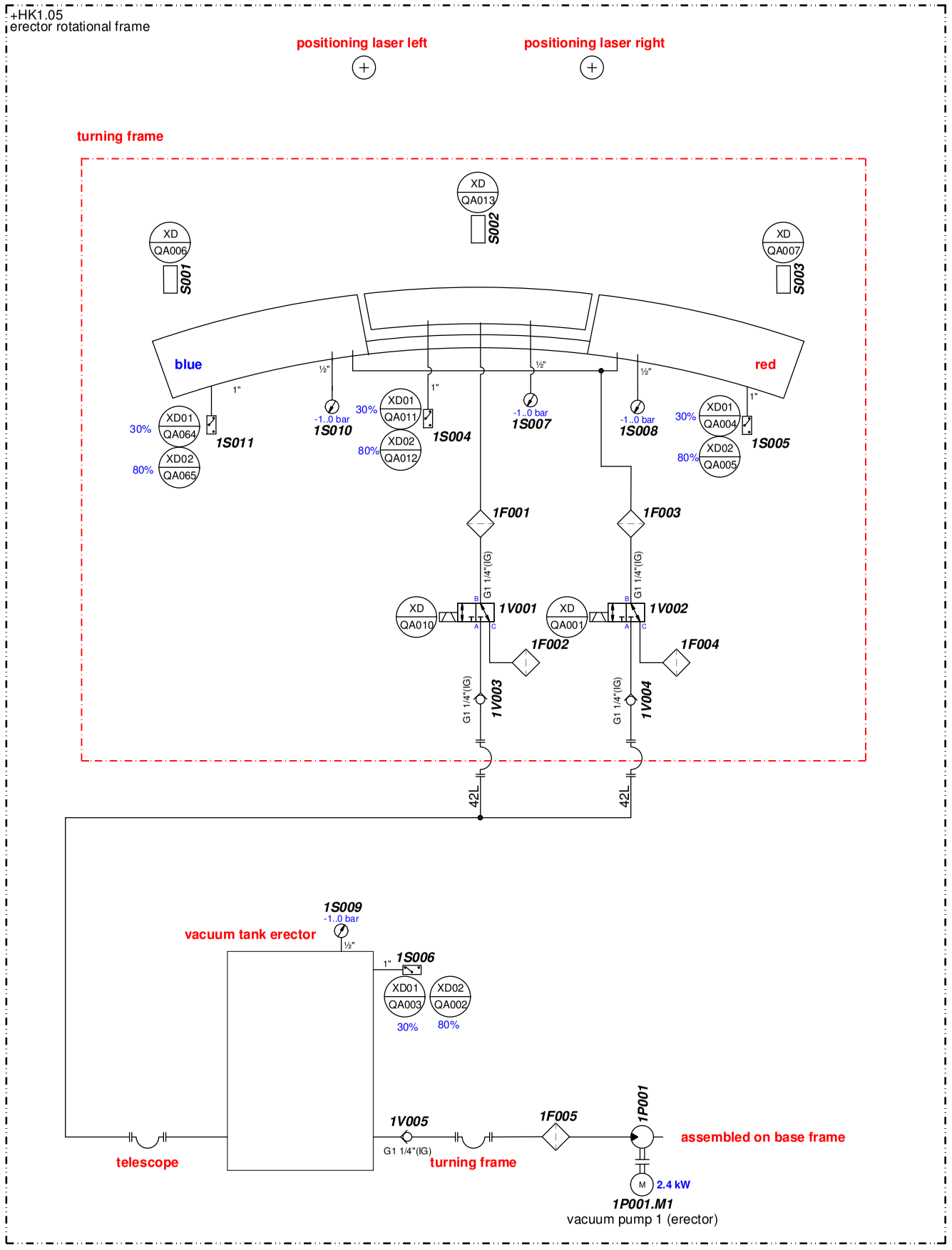

Zur Fertigung freigegeben
unterliegt dem Änderungsdienst

Prüfer: GUTENKUR

Datum: 11.08.2010

Index	Revision	Date	Editor	Date	Ch. by
	Konzept ==> Planung	10.08.2010	METSCHUI	11.08.2010	GUTENKUR

The reproduction, distribution and utilization of this document as well as the communication of the contents to others without express authorization is prohibited. Offenders will be held liable for the payment of damages. All rights reserved in the event of a patent, utility model or design. ISO 16016

HERRENKNECHT AG
Schlehenweg 2
D-77963 Schwanau
Tel.: 07824/302-0
Fax: 07824/3403
Info@Herrenknecht.de

HERRENKNECHT
Tunnelvortriebstechnik

	Date	Name
Edited	10.08.2010	METSCHUI
For checking	10.08.2010	METSCHUI
Checked	11.08.2010	GUTENKUR

Type of drawing: schematic
Projekt: S-623_624
Material:
Name: pneumatic diagram - Vacuum erector

Drawing no.: 2871-504-006-00
Page no.: 1 / 1
Index:

Norm	Article number	Developed from	Weight/KG	Format
	25265896	S-551		A2

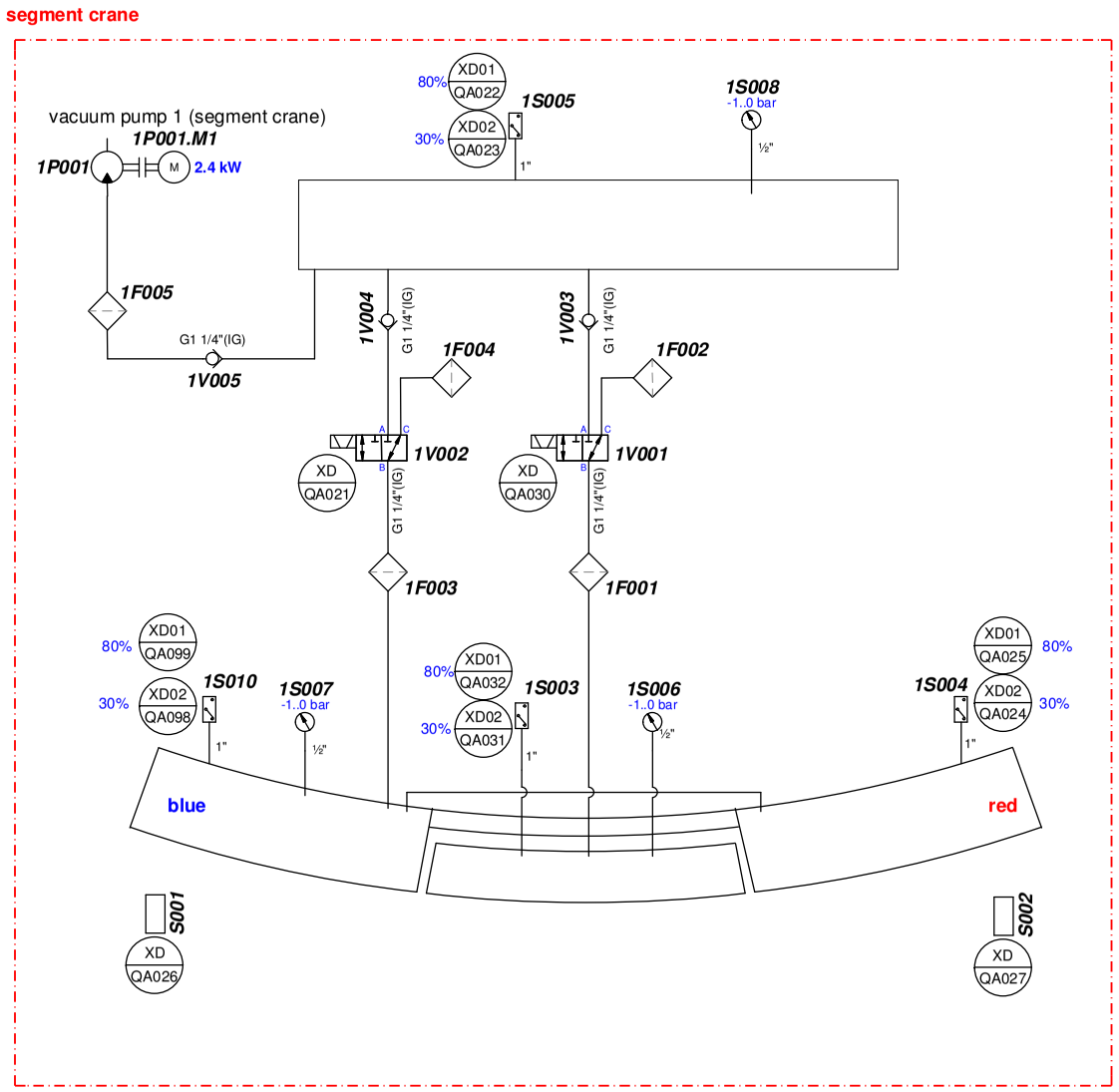

Zur Fertigung freigegeben
unterliegt dem Änderungsdienst

Prüfer: GUTENKUR

Datum: 11.08.2010

Index	Revision	Date	Editor	Date	Ch. by
	Konzept ==> Planung	10.08.2010	METSCHUI	11.08.2010	GUTENKUR

The reproduction, distribution and utilization of this document as well as the communication of the contents to others without express authorization is prohibited.
Offenders will be held liable for the payment of damages. All rights reserved in the event of a patent, utility model or design. ISO 16016

HERRENKNECHT AG
Schlehenweg 2
D-77963 Schwanau
Tel.: 07824/302-0
Fax: 07824/3403
Info@Herrenknecht.de

HERRENKNECHT
Tunnelvortriebstechnik

	Date	Name
Edited	10.08.2010	METSCHUI
For checking	10.08.2010	METSCHUI
Checked	11.08.2010	GUTENKUR

Type of drawing	Projekt	Material
schematic	S-623_624	

Name
pneumatic diagram - Vacuum segment crane

Drawing no.	Page no.	Index
2871-504-006-10	1 / 1	

Norm	Article number	Developed from	Weight/KG	Format
	25265897	S-551		A2